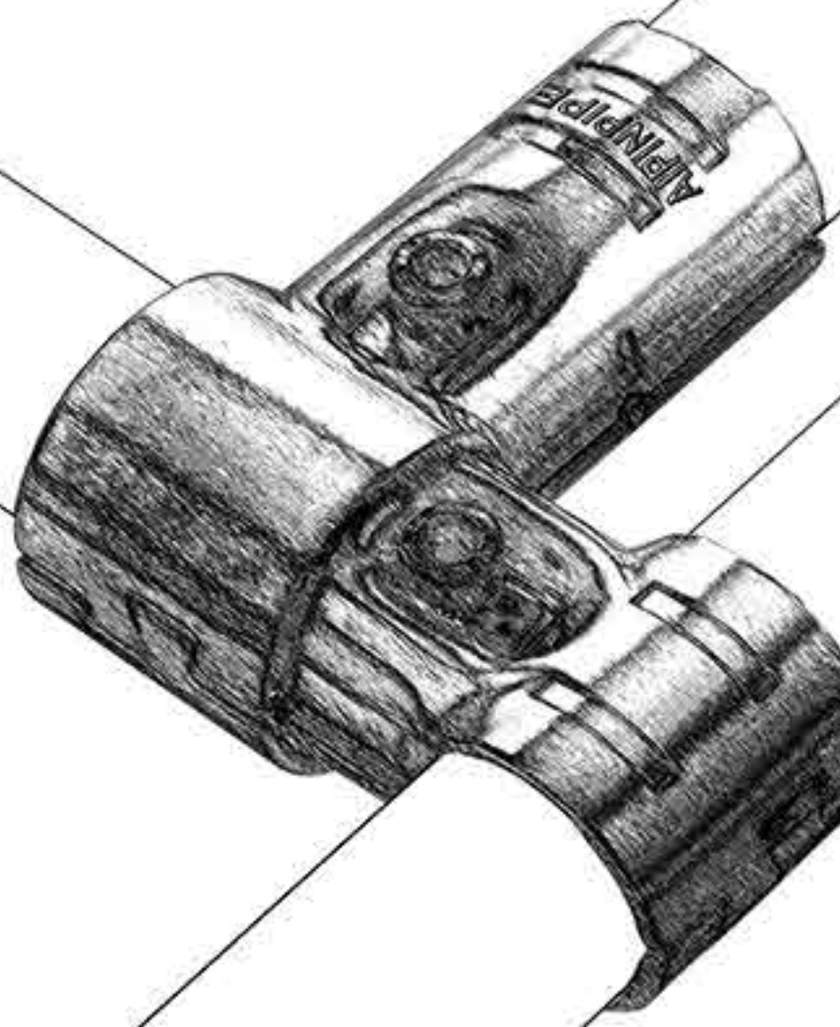

AIPIN 爱拼
LEAN & DIY
PIPE RACKING SYSTEM
物 料 架

AIPIN 爱拼

物料架制造商

成立时间：2006年5月

厂房面积：约6000㎡

员工人数：31人(2025年1月)

年 产 值：约5000万人民币(2024年)

发展历程

2006.05
公司成立
2007.01
公司注册
2008.06
第一个工厂
2010.03
第二个工厂
2011.10
国内首家完成H系列全自动生产
2012.04
第三个工厂
2012.10
完成H系列全流程自动化生产
2013.09
启动ERP软件
2013.10
参加上海展会
2014.02
来到德国、法国
2014.05
来到印度尼西亚、泰国、马来西亚
2014.09
来到日本
2014.10
来到越南
2014.12
来到印度
2015.02
来到匈牙利
2015.03
来到美国
2015.07
新仓库投入使用
2016.06
来到斯洛文尼亚、波兰
2017.03
来到荷兰、土耳其
2017.05
第四个工厂
2017.06
线棒、流利条车间投入使用
2018.03
来到埃及
2018.03
来到韩国
2019.02
来到瑞士
2019.08
精益管流水线建成
2019.11
流利条流水线建成
2020.01
入股SPARK汇燊
2020.05
更换包装
2021.01
倡导工作+度假的生活方式
2021.07
启动精益生产管理
2021.09
开启温泉度假生活
2021.12
开启滨海度假生活
2022.03
开启滨江度假生活

CONTENTS

PIPES
P01
T Series

METAL JOINTS
P05
HJ Series

METAL JOINTS
2.6 Series P11
2.3 Series P15
2.0 Series P15
H Series

ROLLER TRACKS
P17
R Series

PLASTICS
P30
P Series

METAL ACCESSORIES
P35
F Series

LEVELING FEET
P41
L Series

FASTENERS
P45
N Series

CASTERS
P49
C Series

40 SQUARE PIPE
P53
S Series

27 SQUARE PIPE
P55
K Series

ALUMINIUM
P59
A Series

TOOLS
P65
O Series

T Series

PIPES

Coated Pipe

1. Production Craft
This craft includs single-step and automatic integrated process.
Because of the high cost of the first craft,RELL suggests the second one. Moreover, we have successfully researched the automatic integrating pipe craft.

2. Performance and Parameters
Pipe is composed of five parts.
It can be provided according to customers different requirments on performance.

Powder Coated Pipe

1. Colorful
Wider selection of colors and textures.

2. UV light resistance
Can be used in outdoors.

3. Non-flammable
No emission of toxic fumes in fire.

4. Economical
20% less than coated pipe. 35% less than ESD pipe.30% less than SUS pipe.

5. Environmental
Powder coated pipe is fully recyclable. Powder coated pipe of internal and external surface.

SUS Pipe

1. High Strength & Durablity
Surface resistant to light abrasion or contact with metal tools.

2. High Oil & Chemical Resistance
High resistance to oil,solvents,bleaches,etc.

3. Non-flammable
Inherently non-flammable.

4. Conductive
Inherently conductive.

5. Environmental
SUS pipe is fully recyclable.

Galvanized Pipe

1. Economical

2. UV light & Chemical resistance
High resistance to UV light,oil,solvents,bleaches,etc.

3. Non-flammable
Inherently non-flammable.

4. Conductive
Inherently conductive.

5. Environmental
Galvanized pipe is fully recyclable.

Aluminum Alloy Pipe

1. Environmental
Aluminum pipe achieves a superb recyclability.

2. Weight
Weight reduced by 40% comparing with steel coated pipe.

3. Aesthetic
Alumite treatment allows for "maintenance-free",excellent appearance that lasts for long.

Unit : mm

PE Coated Pipe 2440			28 x 1.0			
Green(N)			T-PE10N2440			
Blue(U)			T-PE10U2440			
Red(R)			T-PE10R2440			
Orange(E)			T-PE10E2440			
Yellow(Y)			T-PE10Y2440			
LightYellow(LY)			T-PE10LY2440			
Ivory(V)			T-PE10V2440			
Grey(G)			T-PE10G2440			
Dark Grey(DG)			T-PE10DG2440			
Black(B)			T-PE10B2440			
Snow White(SW)			T-PE10SW2440			
Milky White(MW)			T-PE10MW2440			

PE Coated Pipe 4000	28 x 0.7	28 x 0.9	28 x 1.0	28 x 1.1	28 x 1.4	28 x 2.0
Green(N)	T-PE07N	T-PE09N	T-PE10N	T-PE11N	T-PE14N	T-PE20N
Blue(U)	T-PE07U	T-PE09U	T-PE10U	T-PE11U	T-PE14U	T-PE20U
Red(R)	T-PE07R	T-PE09R	T-PE10R	T-PE11R	T-PE14R	T-PE20R
Orange(E)	T-PE07E	T-PE09E	T-PE10E	T-PE11E	T-PE14E	T-PE20E
Yellow(Y)	T-PE07Y	T-PE09Y	T-PE10Y	T-PE11Y	T-PE14Y	T-PE20Y
LightYellow(LY)	T-PE07LY	T-PE09LY	T-PE10LY	T-PE11LY	T-PE14LY	T-PE20LY
Ivory(V)	T-PE07V	T-PE09V	T-PE10V	T-PE11V	T-PE14V	T-PE20V
Grey(G)	T-PE07G	T-PE09G	T-PE10G	T-PE11G	T-PE14G	T-PE20G
Dark Grey(DG)	T-PE07DG	T-PE09DG	T-PE10DG	T-PE11DG	T-PE14DG	T-PE20DG
Black(B)	T-PE07B	T-PE09B	T-PE10B	T-PE11B	T-PE14B	T-PE20B
Snow White(SW)	T-PE07SW	T-PE09SW	T-PE10SW	T-PE11SW	T-PE14SW	T-PE20SW
Milky White(MW)	T-PE07MW	T-PE09MW	T-PE10MW	T-PE11MW	T-PE14MW	T-PE20MW

ABS Coated Pipe 4000			28 x 1.0			28 x 2.0
Green(N)			T-ABS10N			T-ABS20N
Blue(U)			T-ABS10U			T-ABS20U
Red(R)			T-ABS10R			T-ABS20R
Orange(E)			T-ABS10E			T-ABS20E
Yellow(Y)			T-ABS10Y			T-ABS20Y
LightYellow(LY)			T-ABS10LY			T-ABS20LY
Ivory(V)			T-ABS10V			T-ABS20V
Grey(G)			T-ABS10G			T-ABS20G
Dark Grey(DG)			T-ABS10DG			T-ABS20DG
Black(B)			T-ABS10B			T-ABS20B
Snow White(SW)			T-ABS10SW			T-ABS20SW
Milky White(MW)			T-ABS10MW			T-ABS20MW

PIPES

Powder Coated Pipe 4000			28 x 1.0			
Green(N)			T-PW10N			
Blue(U)			T-PW10U			
Red(R)			T-PW10R			
Orange(E)			T-PW10E			
Yellow(Y)			T-PW10Y			
LightYellow(LY)			T-PW10LY			
Ivory(V)			T-PW10V			
Grey(G)			T-PW10G			
Dark Grey(DG)			T-PW10DG			
Black(B)			T-PW10B			
Snow White(SW)			T-PW10SW			
Milky White(MW)			T-PW10MW			

ESD Pipe			28 x 1.0			28 x 2.0
Black(B)			T-ESD10B			T-ESD20B
Black(B)			T-ESD10B2440			

Flat Pipe			28 x 1.0			
			T-FL10V			
			T-FL10U2440			

Slide Pipe			28 x 1.0			
			T-SL10V			

SUS 201 Pipe	28 x 0.7	28 x 0.9		28 x 1.1		
	T-SUS07	T-SUS09		T-SUS11		

STS 409 Pipe	28 x 0.7					
	T-STS07					
	T-STS072440					

Galvanized Pipe			28 x 1.0			
			T-ZN10			

Aluminum Alloy Pipe					28 x 1.2	
					T-AL12OX	

HJ Series

METAL JOINTS

METAL JOINTS

SURFACE : ●BK ○WZ ○NP ○CP ●PC

HJ-1

H-1 : 2 Pcs	kg/Set : 0.145
N-1/N-2 : 1 Set	Sets/Ctn : 4 / 140

HJ-1A

H-1A : 2 Pcs	kg/Set : 0.130
N-1/N-2 : 1 Set	Sets/Ctn : 4 / 170

HJ-2

H-2 : 1 Pc	kg/Set : 0.235
H-3 : 1 Pc	Sets/Ctn : 4 / 50
N-1/N-2 : 2 Sets	

HJ-3

H-2 : 2 Pcs	kg/Set : 0.325
H-4 : 1 Pc	Sets/Ctn : 4 / 60
N-1/N-2 : 3 Sets	

HJ-4

H-4 : 2 Pcs	kg/Set : 0.235
N-1/N-2 : 2 Sets	Sets/Ctn : 4 / 90

HJ-5

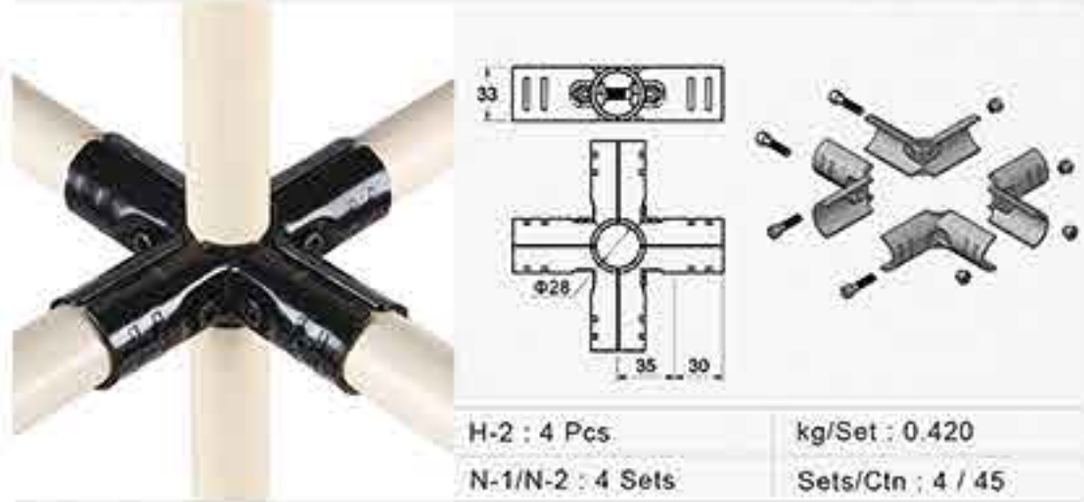

H-2 : 4 Pcs	kg/Set : 0.420
N-1/N-2 : 4 Sets	Sets/Ctn : 4 / 45

HJ-6

H-5 : 2 Pcs	kg/Set : 0.230
H-6 : 2 Pcs	Sets/Ctn : 4 / 70
N-1/N-2 : 2 Sets	

HJ-6A

H-6 : 2 Pcs	kg/Set : 0.280
H-6A : 2 Pcs	Sets/Ctn : 4 / 60
N-1/N-2 : 3 Sets	

HJ-6B

H-5 : 2 Pcs	kg/Set : 0.100
N-1/N-2 : 1 Set	Sets/Ctn : 4 / 140

HJ-6C

H-6A : 2 Pcs	kg/Set : 0.160
N-1/N-2 : 2 Sets	Sets/Ctn : 4 / 110

HJ-7

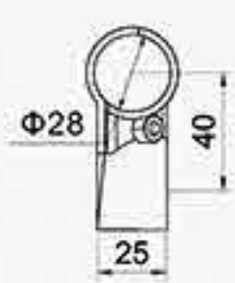

H-7 : 2 Pcs	kg/Set : 0.110
N-1/N-2 : 1 Set	Sets/Ctn : 4 / 90

HJ-7A

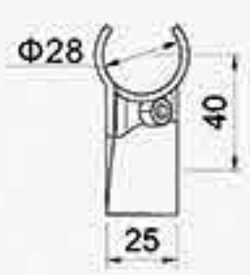

H-7A : 2 Pcs	kg/Set : 0.090
N-1/N-2 : 1 Set	Sets/Ctn : 4 / 140

HJ-8

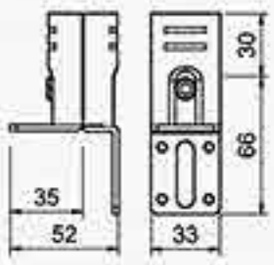

H-8 : 1 Pc	kg/Set : 0.140
H-9 : 1 Pc	Sets/Ctn : 4 / 130
N-1/N-2 : 1 Set	

HJ-9

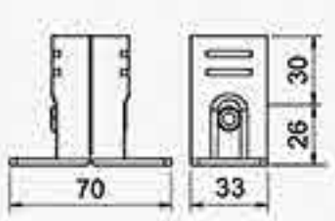

H-9 : 2 Pcs	kg/Set : 0.135
N-1/N-2 : 1 Set	Sets/Ctn : 4 / 150

HJ-10

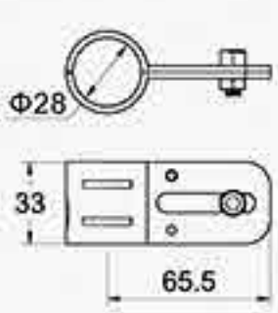

H-10 : 2 Pcs	kg/Set : 0.120
N-1/N-2M612 : 1 Set	Sets/Ctn : 4 / 150

HJ-11

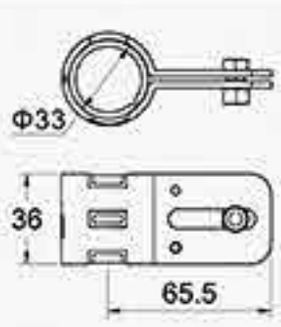

H-11 : 2 Pcs	kg/Set : 0.140
P-6 : 1 Pc	Sets/Ctn : 4 / 80
N-1/N-2M612 : 1 Set	

HJ-12

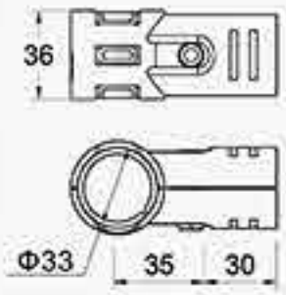

H-12 : 2 Pcs	kg/Set : 0.150
P-6 : 1 Pc	Sets/Ctn : 4 / 70
N-1/N-2 : 1 Set	

HJ-13

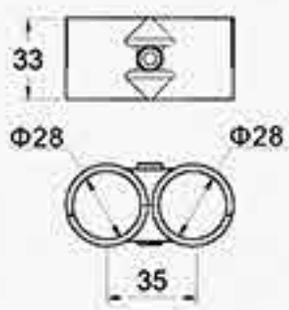

H-13 : 2 Pcs	kg/Set : 0.120
N-1/N-2 : 1 Set	Sets/Ctn : 4 / 140

HJ-13A

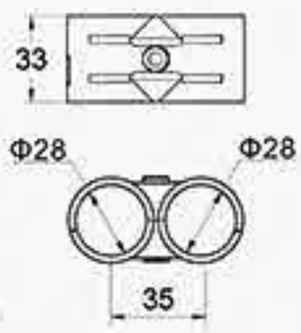

H-13A : 2 Pcs	kg/Set : 0.120
N-1/N-2 : 1 Set	Sets/Ctn : 4 / 140

HJ-13B

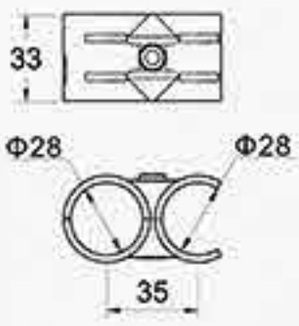

H-13B : 2 Pcs	kg/Set : 0.120
N-1/N-2 : 1 Set	Sets/Ctn : 4 / 250

METAL JOINTS

SURFACE : ●BK ○WZ ○NP ○CP ●PC

HJ-14

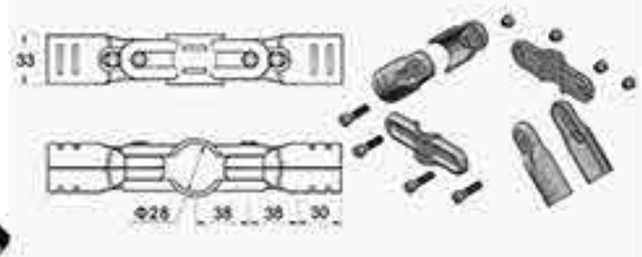

H-14 : 2 Pcs	kg/Set : 0.335
H-6 : 4 Pcs	Sets/Ctn : 4 / 45
N-1/N-2 : 4 Sets	

HJ-14A

H-14 : 2 Pcs	kg/Set : 0.135
N-1/N-2 : 2 Sets	Sets/Ctn : 4 / 150

HJ-15

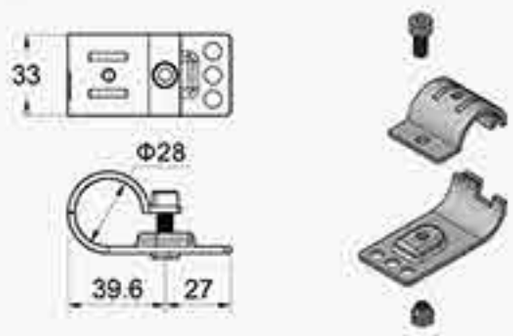

H-15 : 1 Pc	kg/Set : 0.095
H-16 : 1 Pc	Sets/Ctn : 4 / 200
N-1/N-2M612 : 1 Set	

HJ-15A

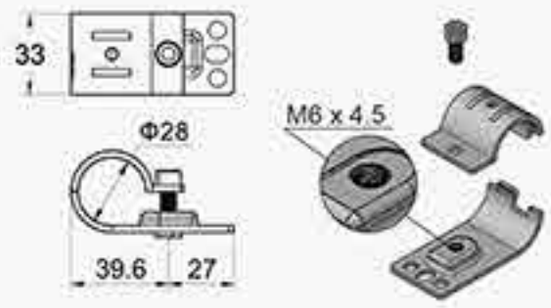

H-15 : 1 Pc	kg/Set : 0.095
H-16A : 1 Pc	Sets/Ctn : 4 / 200
N-2M612 : 1 Set	

HJ-17

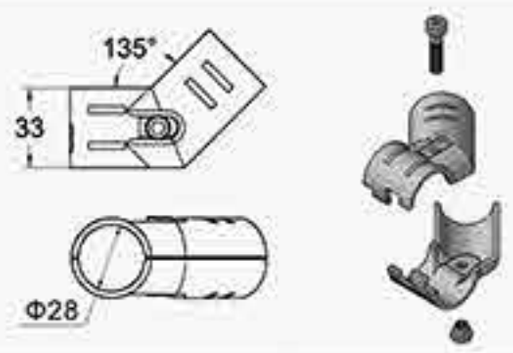

H-17 : 1 Pc	kg/Set : 0.150
H-18 : 1 Pc	Sets/Ctn : 4 / 100
N-1/N-2 : 1 Set	

HJ-19

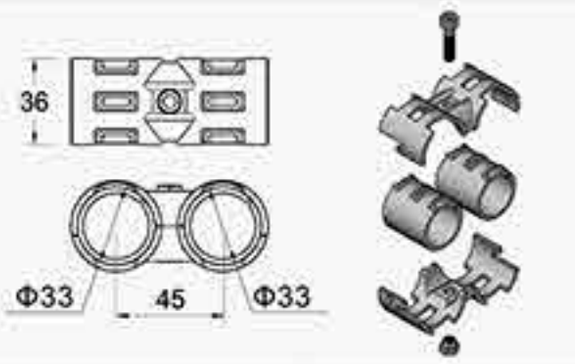

H-19 : 2 Pcs	kg/Set : 0.155
P-6 : 2 Pcs	Sets/Ctn : 4 / 50
N-1/N-2 : 1 Set	

HJ-20

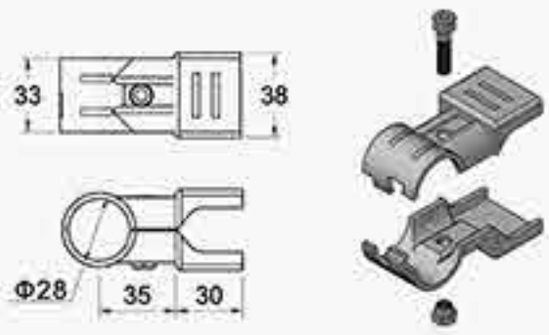

H-20 : 2 Pcs	kg/Set : 0.150
N-1/N-2 : 1 Set	Sets/Ctn : 4 / 90

HJ-20A

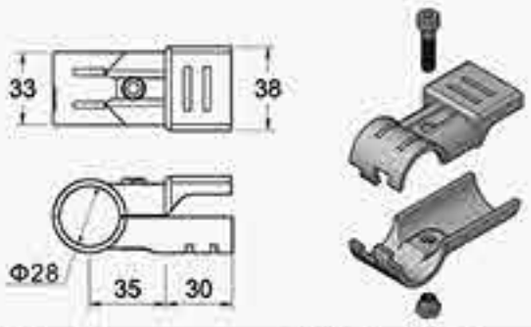

H-20 : 1 Pc	kg/Set : 0.150
H-1 : 1 Pc	Sets/Ctn : 4 / 120
N-1/N-2 : 1 Set	

HJ-21

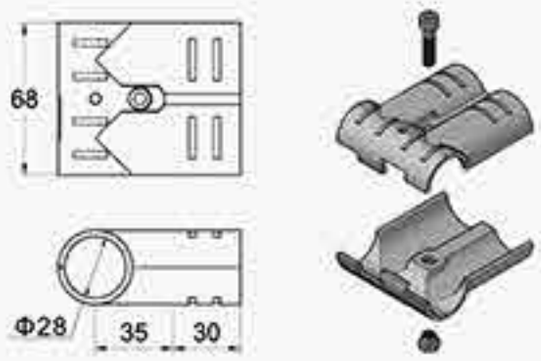

H-21 : 2 Pcs	kg/Set : 0.280
N-1/N-2 : 1 Set	Sets/Ctn : 4 / 70

HJ-23

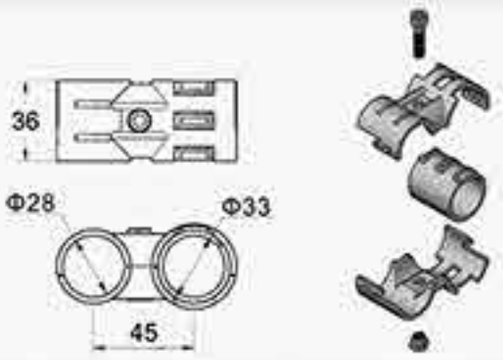

H-23 : 2 Pcs	kg/Set : 0.150
P-6 : 1 Pcs	Sets/Ctn : 4 / 60
N-1/N-2 : 1 Set	

HJ-24

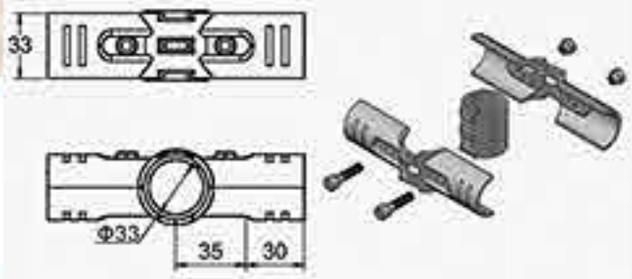

H-24 : 2 Pcs	kg/Set : 0.235
P-6 : 1 Pc	Sets/Ctn : 4 / 70
N-1/N-2 : 2 Sets	

HJ-30

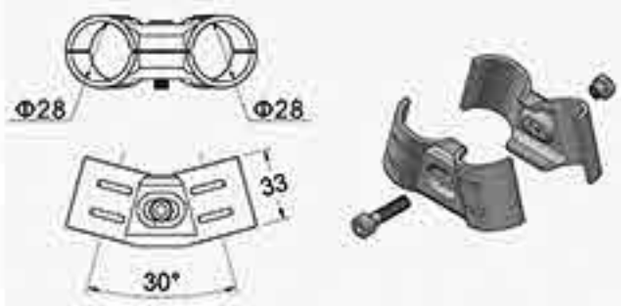

H-30 : 2 Pcs	kg/Set : 0.135
N-1/N-2 : 1 Set	Sets/Ctn : 4 / 150

HJ-45

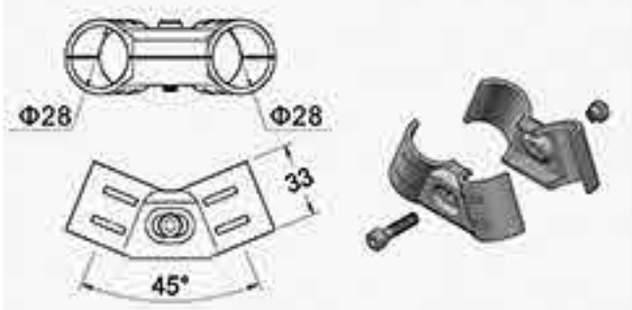

H-45 : 2 Pcs	kg/Set : 0.145
N-1/N-2 : 1 Set	Sets/Ctn : 4 / 100

HJ-60

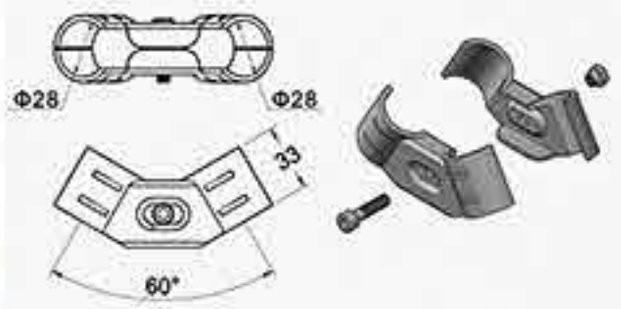

H-60 : 2 Pcs	kg/Set : 0.180
N-1/N-2 : 1 Set	Sets/Ctn : 4 / 70

HJ-90

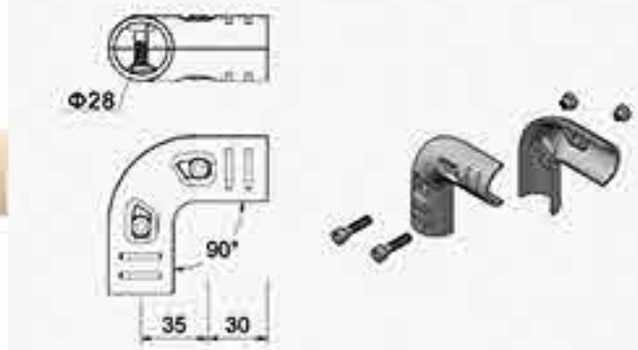

H-90 : 2 Pcs	kg/Set : 0.225
N-1/N-2 : 2 Sets	Sets/Ctn : 4 / 75

HJ-110

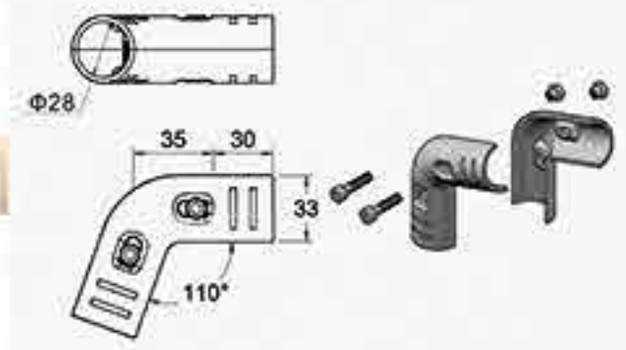

H-110 : 2 Pcs	kg/Set : 0.250
N-1/N-2 : 2 Sets	Sets/Ctn : 4 / 70

HJ-160

H-160 : 2 Pcs	kg/Set : 0.250
N-1/N-2 : 2 Sets	Sets/Ctn : 4 / 70

HJ-180

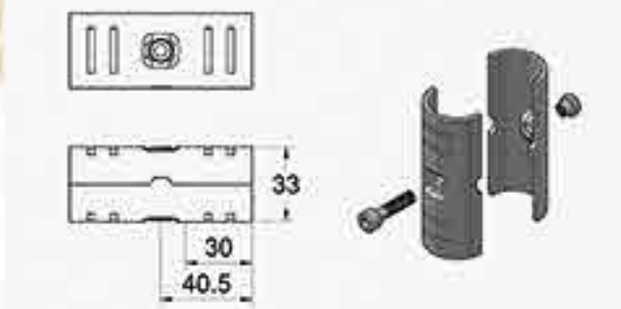

H-180 : 2 Pcs	kg/Set : 0.155
N-1/N-2 : 1 Set	Sets/Ctn : 4 / 140

METAL JOINTS（Φ33）

SURFACE : ●BK ○WZ ○NP ○CP ●PC

HJ-103

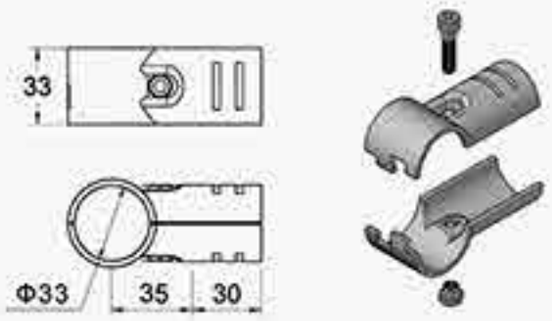

H-103 : 2 Pcs	kg/Set : 0.160
N-1/N-2 : 1 Set	Sets/Ctn : 4 / 110

HJ-403

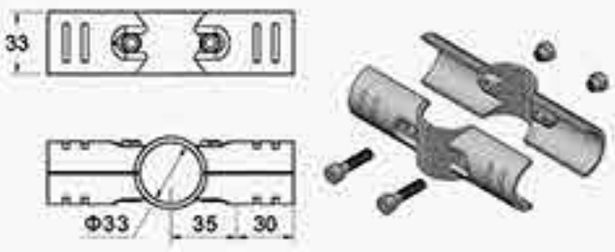

H-403 : 2 Pcs	kg/Set : 0.235
N-1/N-2 : 2 Sets	Sets/Ctn : 4 / 90

HJ-13C

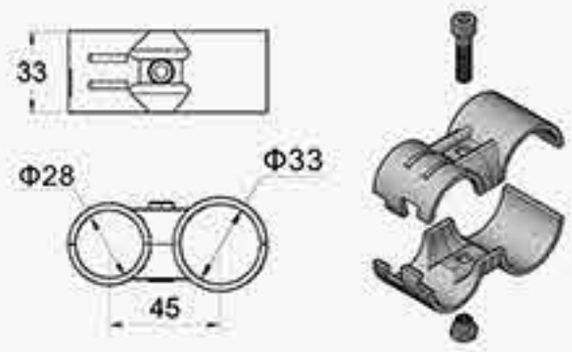

H-13C : 2 Pcs	kg/Set : 0.150
N-1/N-2 : 1 Set	Sets/Ctn : 4 / 80

HJ-13D

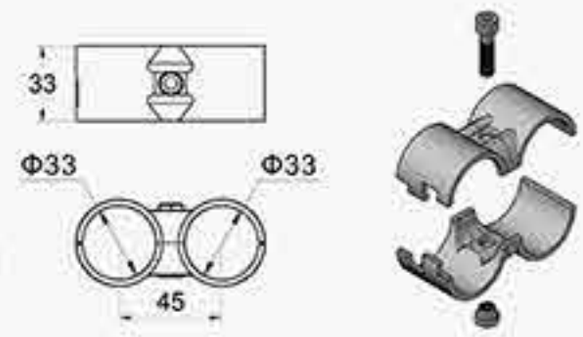

H-13D : 2 Pcs	kg/Set : 0.150
N-1/N-2 : 1 Set	Sets/Ctn : 4 / 80

METAL JOINTS （Φ28.6）

HJ-101

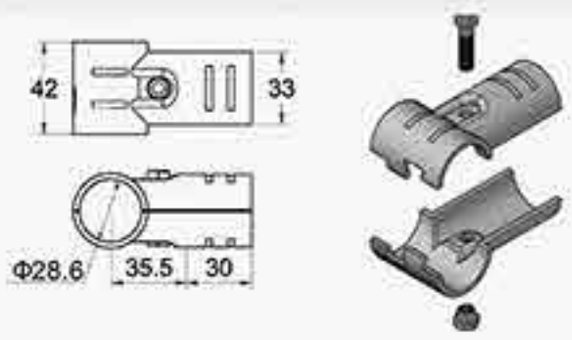

H-101 : 2 Pcs	kg/Set : 0.170
N-1/N-2 : 1 Set	Sets/Ctn : 4 / 90

HJ-102

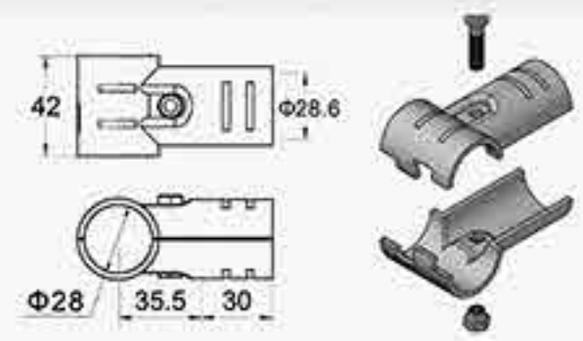

H-102 : 2 Pcs	kg/Set : 0.170
N-1/N-2 : 1 Set	Sets/Ctn : 4 / 90

HJ-201

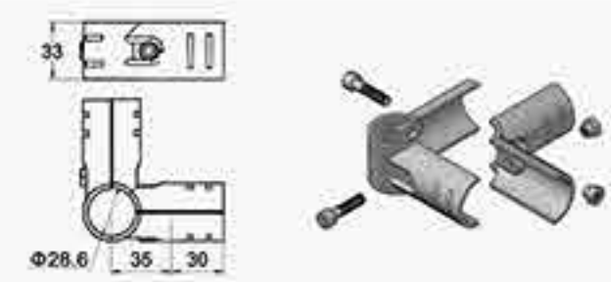

H-301 : 1 Pc	kg/Set : 0.240
H-2 : 1 Pc	Sets/Ctn : 4 / 50
N-1/N-2 : 2 Sets	

HJ-301

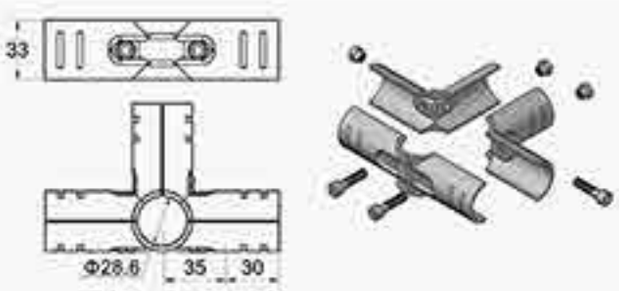

H-301 : 1 Pc	kg/Set : 0.330
H-2 : 2 Pcs	Sets/Ctn : 4 / 60
N-1/N-2 : 3 Sets	

HJ-401

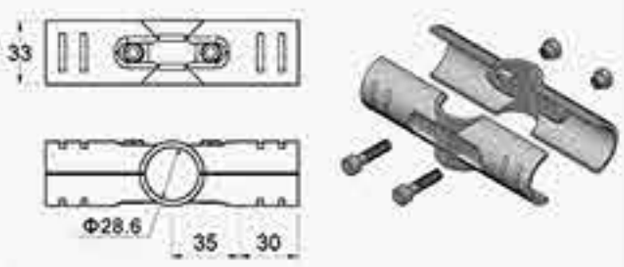

H-401 : 2 Pcs	kg/Set : 0.240
N-1/N-2 : 2 Sets	Sets/Ctn : 4 / 90

H Series

METAL JOINTS

METAL JOINTS

SURFACE : ●BK ○WZ ○NP ○CP ●PC

H-1

kg/Pc	0.067
Pc/Ctn	300

H-1A

kg/Pc	0.058
Pc/Ctn	360

H-2

kg/Pc	0.094
Pc/Ctn	200

H-3 (Ungrip Type)

kg/Pc	0.120
Pc/Ctn	80

H-3K (Grip Type)

kg/Pc	0.120
Pc/Ctn	80

H-4

kg/Pc	0.106
Pc/Ctn	200

H-5

kg/Pc	0.045
Pc/Ctn	300

H-6

kg/Pc	0.059
Pc/Ctn	300

H-6A

kg/Pc	0.066
Pc/Ctn	240

H-7

kg/Pc	0.048
Pc/Ctn	200

H-7A

kg/Pc	0.040
Pc/Ctn	300

H-8

kg/Pc	0.067
Pc/Ctn	240

H-9

kg/Pc	0.062
Pc/Ctn	330

H-10

kg/Pc	0.054
Pc/Ctn	300

H-11

kg/Pc	0.060
Pc/Ctn	280

H-12

kg/Pc	0.063
Pc/Ctn	240

H-13

kg/Pc	0.053
Pc/Ctn	300

H-13A

kg/Pc	0.052
Pc/Ctn	330

H-13B

kg/Pc	0.044
Pc/Ctn	540

H-14

kg/Pc	0.056
Pc/Ctn	320

H-15

kg/Pc	0.038
Pc/Ctn	400

H-16

kg/Pc	0.046
Pc/Ctn	400

H-16A

kg/Pc	0.046
Pc/Ctn	400

H-17

kg/Pc	0.069
Pc/Ctn	220

H-18

kg/Pc	0.069
Pc/Ctn	220

H-19

kg/Pc	0.062
Pc/Ctn	200

H-20

kg/Pc	0.070
Pc/Ctn	200

H-21

kg/Pc	0.133
Pc/Ctn	150

H-23

kg/Pc	0.064
Pc/Ctn	180

H-24

kg/Pc	0.102
Pc/Ctn	200

H-30

kg/Pc	0.062
Pc/Ctn	330

H-45

kg/Pc	0.066
Pc/Ctn	230

H-60

kg/Pc	0.083
Pc/Ctn	150

H-90

kg/Pc	0.102
Pc/Ctn	150

H-110

kg/Pc	0.113
Pc/Ctn	150

H-160

kg/Pc	0.114
Pc/Ctn	160

H-180

kg/Pc	0.071
Pc/Ctn	300

METAL JOINTS（Φ33）

SURFACE : ●BK ○WZ ○NP ○CP ●PC

H-103

kg/Pc	0.073
Pc/Ctn	240

H-403

kg/Pc	0.106
Pc/Ctn	200

H-13C

kg/Pc	0.069
Pc/Ctn	180

H-13D

kg/Pc	0.068
Pc/Ctn	180

METAL JOINTS（Φ28.6）

H-101

kg/Pc	0.078
Pc/Ctn	200

H-102

kg/Pc	0.078
Pc/Ctn	200

H-301

kg/Pc	0.120
Pc/Ctn	80

H-401

kg/Pc	0.108
Pc/Ctn	200

METAL JOINTS（T 2.3）

H-1

kg/Pc	0.061
Pc/Ctn	300

H-2

kg/Pc	0.086
Pc/Ctn	200

H-3（Ungrip Type）

kg/Pc	0.111
Pc/Ctn	80

H-4

kg/Pc	0.098
Pc/Ctn	200

H-5

kg/Pc	0.042
Pc/Ctn	300

H-6

kg/Pc	0.055
Pc/Ctn	300

H-13A

kg/Pc	0.050
Pc/Ctn	330

H-15

kg/Pc	0.032
Pc/Ctn	400

H-16

kg/Pc	0.042
Pc/Ctn	400

H-17

kg/Pc	0.065
Pc/Ctn	220

H-18

kg/Pc	0.065
Pc/Ctn	220

H-90

kg/Pc	0.095
Pc/Ctn	150

METAL JOINTS（T 2.3 NEW）

H-1

kg/Pc	0.061
Pc/Ctn	300

H-2

kg/Pc	0.086
Pc/Ctn	200

H-3

kg/Pc	0.111
Pc/Ctn	80

R Series

ROLLER TRACKS

R-4036

- 36 — Shaft Distance
- 40 — Roller Track Width

ROLLER TRACKS

SURFACE : ● BK ◎ WZ

R-3533

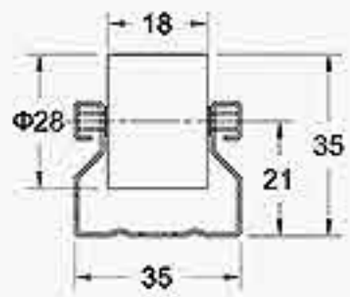

kg/m	0.830
m/Pc	4
m/Bdl	40

R-4036

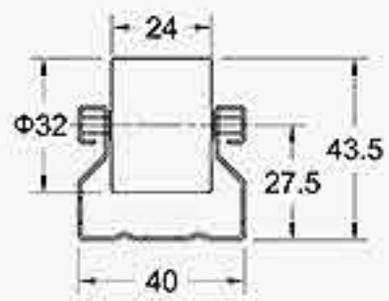

kg/m	1.100
m/Pc	3.99
m/Bdl	39.9

R-S4036

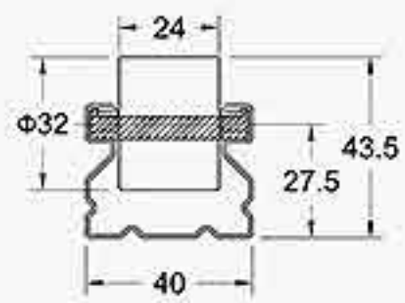

kg/m	1.100
m/Pc	4
m/Bdl	40

R-4036A

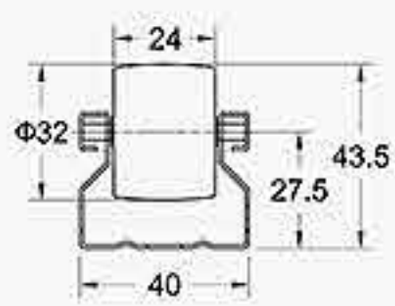

kg/m	1.100
m/Pc	3.99
m/Bdl	39.9

R-S4036A

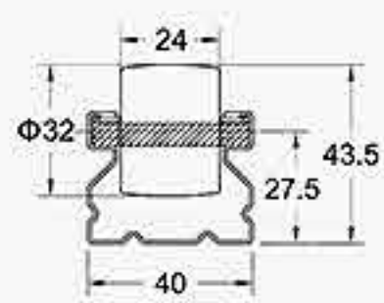

kg/m	1.100
m/Pc	4
m/Bdl	40

R-40225

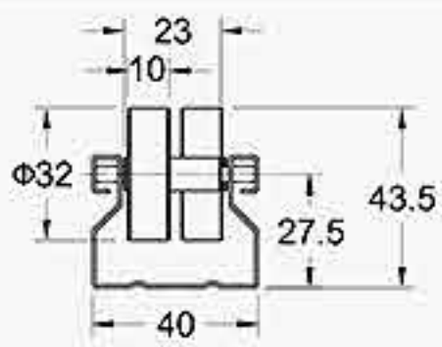

kg/m	1.100
m/Pc	4
m/Bdl	40

R-4045A

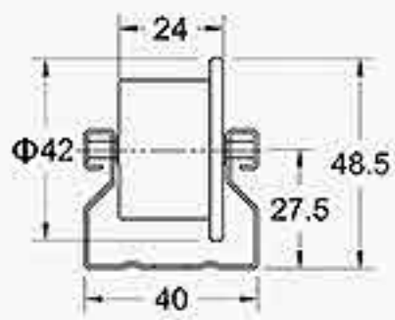

kg/m	1.100
m/Pc	4
m/Bdl	40

R-4045B

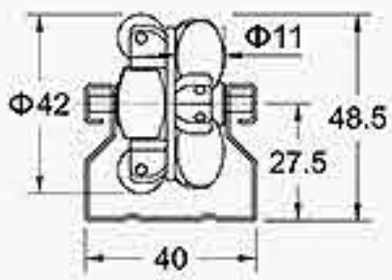

kg/m	1.100
m/Pc	4
m/Bdl	40

R-6016

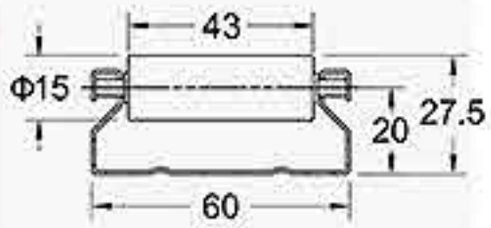

kg/m	1.450
m/Pc	4
m/Bdl	24

R-6032

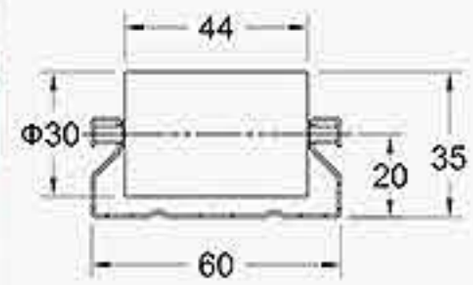

kg/m	1.450
m/Pc	4
m/Bdl	24

R-8040

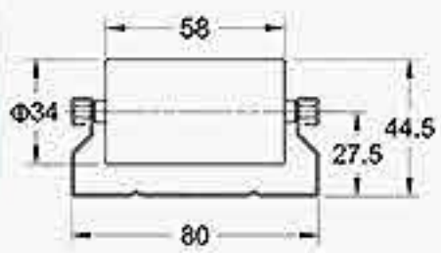

kg/m	1.620
m/Pc	4
m/Bdl	16

R-S8040

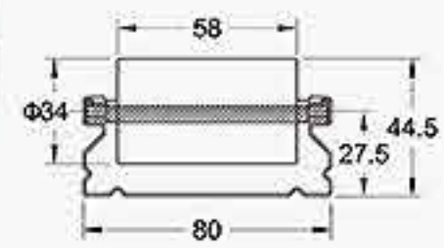

kg/m	1.620
m/Pc	4
m/Bdl	16

R-8519

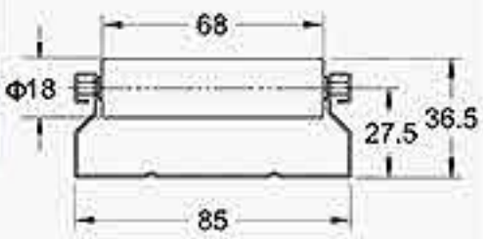

kg/m	2.000
m/Pc	4
m/Bdl	16

R-S8520

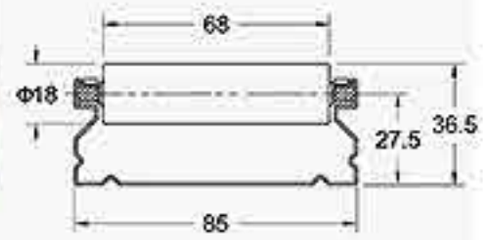

kg/m	2.000
m/Pc	4
m/Bdl	16

R-8525

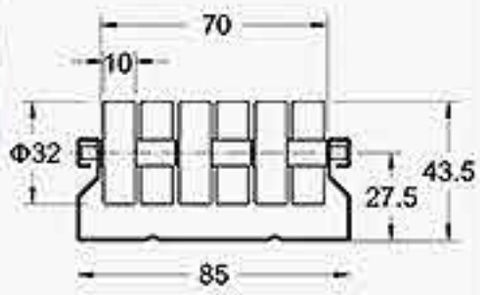

kg/m	1.650
m/Pc	4
m/Bdl	16

R-8550

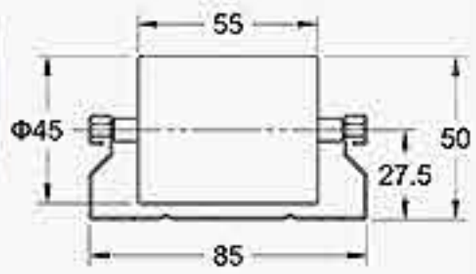

kg/m	1.650
m/Pc	4
m/Bdl	16

ROLLER TRACKS （R-28H）

SURFACE : ● BK ○ WZ

R-28H1

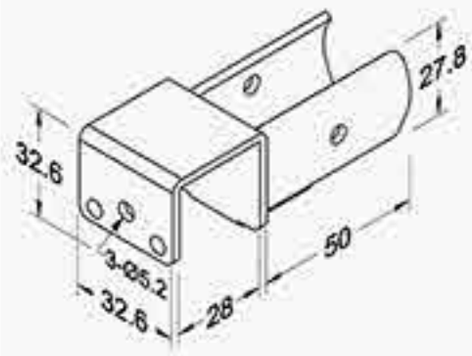

kg/Pc	0.128
Pc/Ctn	95

R-28H2

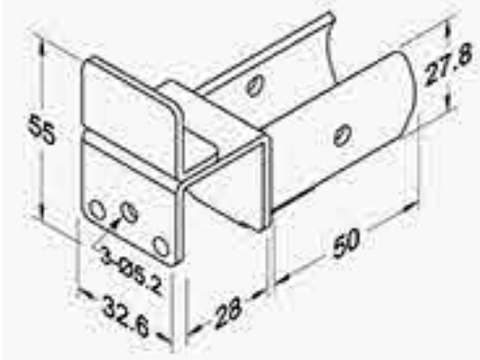

kg/Pc	0.150
Pc/Ctn	85

R-28H3

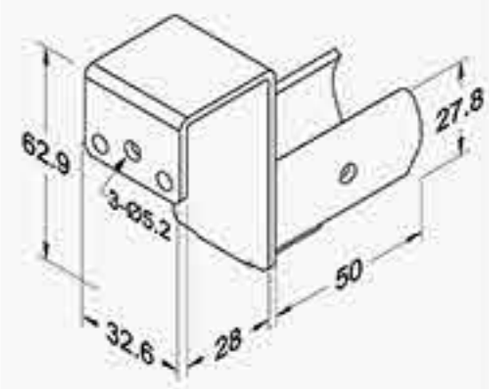

kg/Pc	0.153
Pc/Ctn	80

R-28H4B

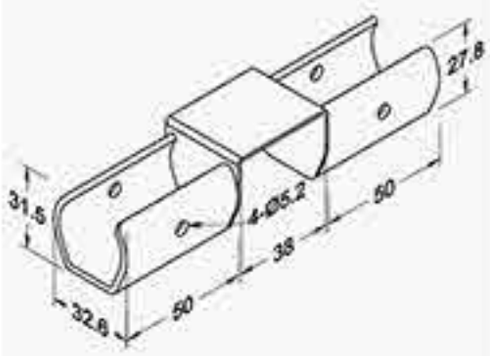

kg/Pc	0.171
Pc/Ctn	50

R-28H5

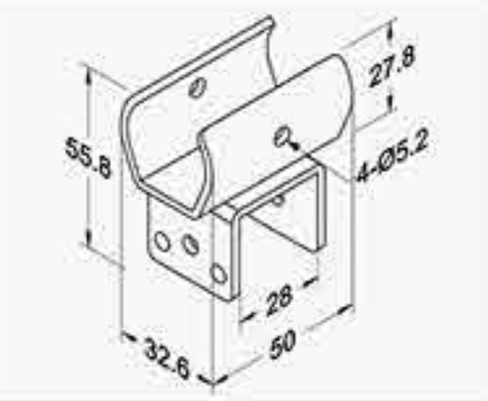

kg/Pc	0.112
Pc/Ctn	110

R-28H5B

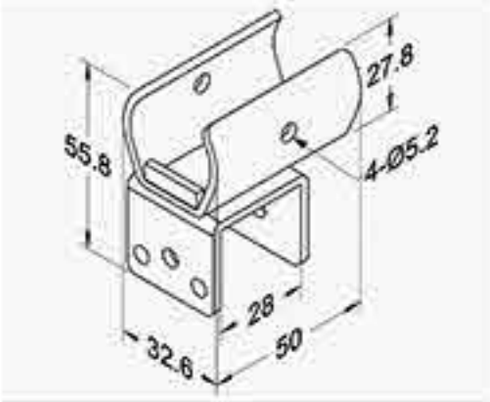

kg/Pc	0.117
Pc/Ctn	110

ROLLER TRACKS （R-35H）

R-35H1

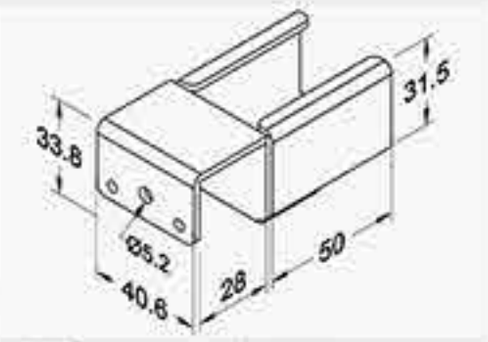

kg/Pc	0.167
Pc/Ctn	70

R-35H2

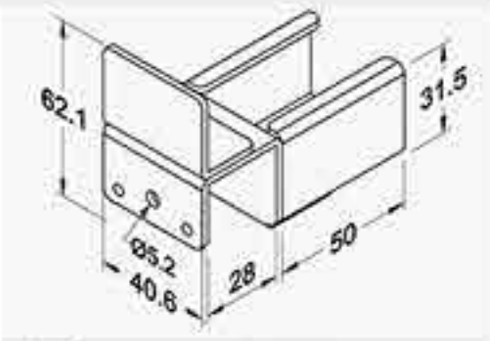

kg/Pc	0.211
Pc/Ctn	45

R-35H3A

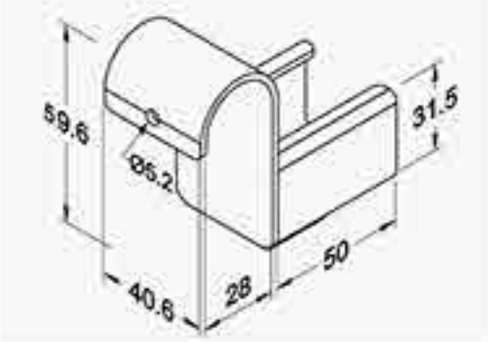

kg/Pc	0.191
Pc/Ctn	55

R-35H5

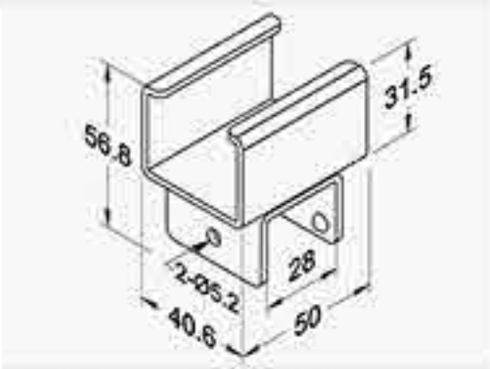

kg/Pc	0.137
Pc/Ctn	90

ROLLER TRACKS （R-40H）

R-40BH1

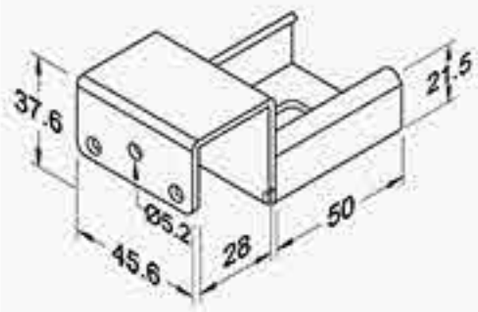

kg/Pc	0.141
Pc/Ctn	65

R-40BH2

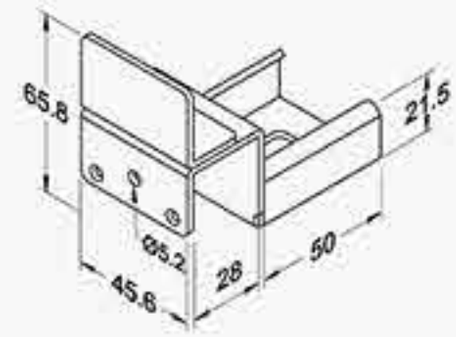

kg/Pc	0.193
Pc/Ctn	60

R-40BH3

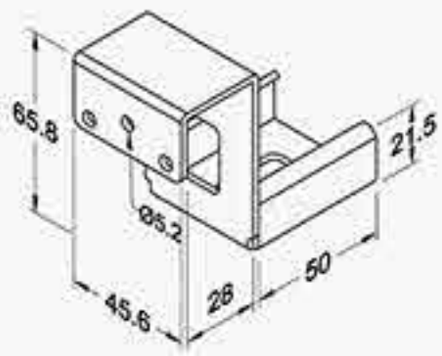

kg/Pc	0.167
Pc/Ctn	60

R-40BH4

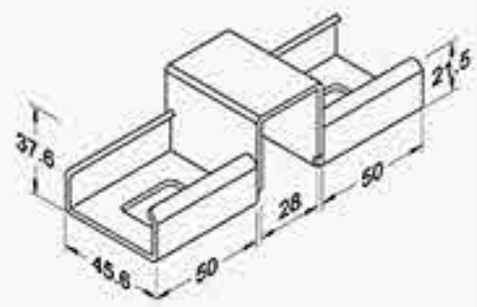

kg/Pc	0.270
Pc/Ctn	35

R-40BH5

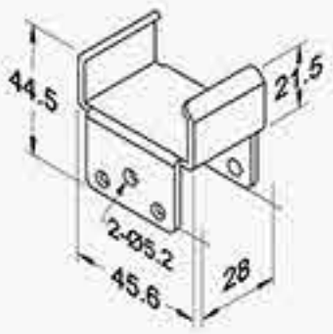

kg/Pc	0.120
Pc/Ctn	160

R-40BH6

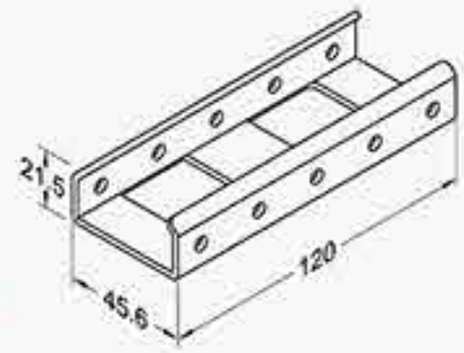

kg/Pc	0.180
Pc/Ctn	110

R-40BH6A

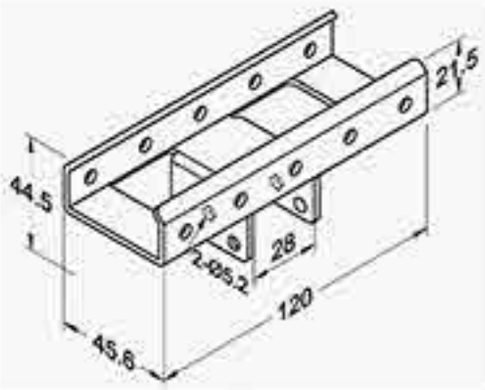

kg/Pc	0.230
Pc/Ctn	50

R-40BH31

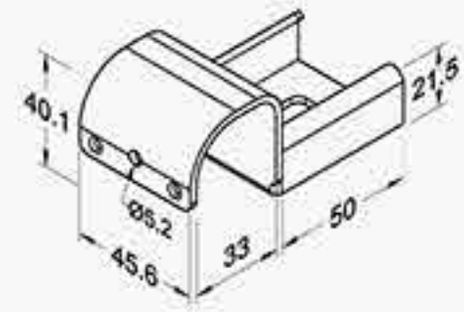

kg/Pc	0.180
Pc/Ctn	80

R-40BH33

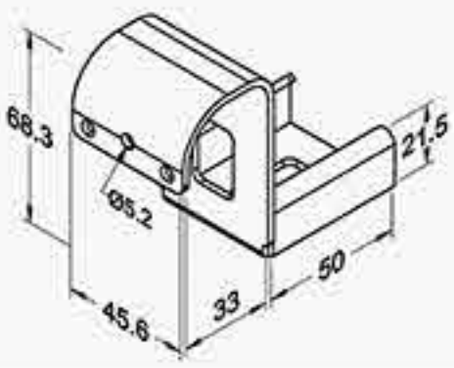

kg/Pc	0.230
Pc/Ctn	65

R Series

ROLLER TRACKS （R-40H）

SURFACE : ● BK ○ WZ

R-40H1

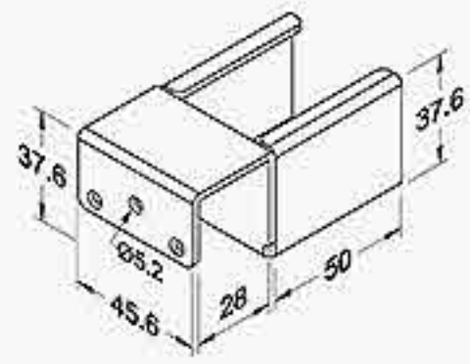

kg/Pc	0.182
Pc/Ctn	45

R-40H2

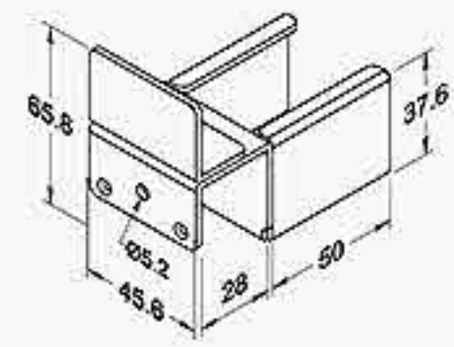

kg/Pc	0.234
Pc/Ctn	45

R-40H3

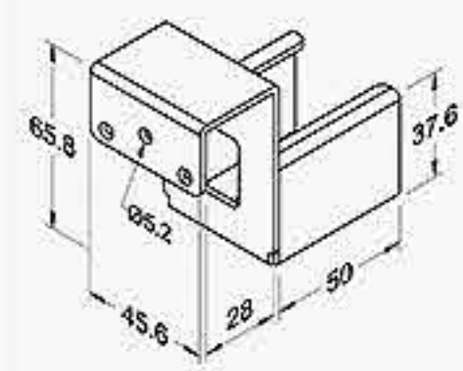

kg/Pc	0.208
Pc/Ctn	40

R-40H6

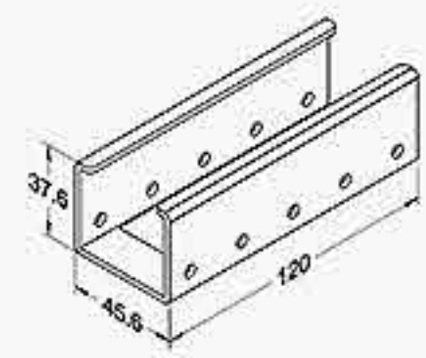

kg/Pc	0.272
Pc/Ctn	50

R-40H6A

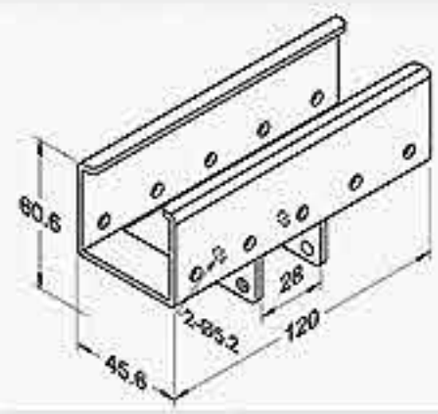

kg/Pc	0.320
Pc/Ctn	20

ROLLER TRACKS （RP-40）

RP-40A

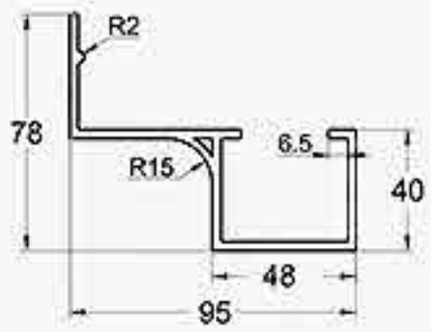

kg/m	0.980
m/Pc	4
m/Bdl	40

RP-40B

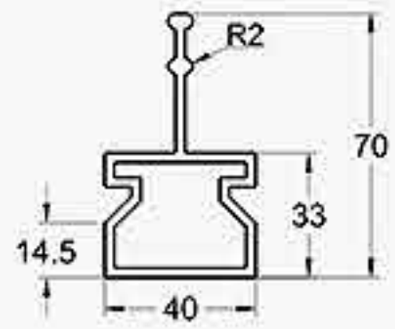

kg/m	0.660
m/Pc	4
m/Bdl	40

RP-40C

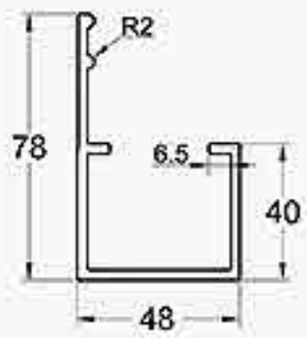

kg/m	0.960
m/Pc	4
m/Bdl	40

RP-40D

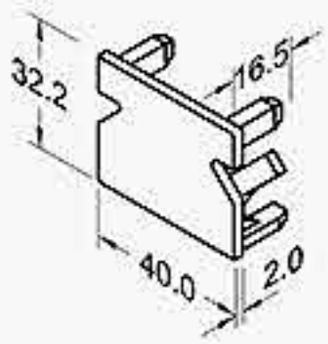

Kg/Pc	4
Pc/Ctn	40

RP-5030ESD2440

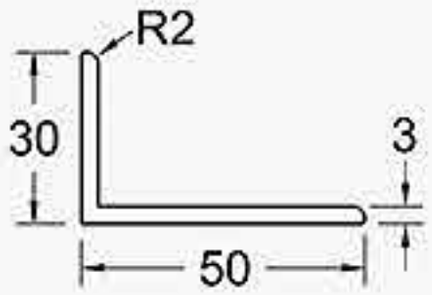

kg/m	0.400
m/Pc	2.44
m/Bdl	48.8

R Series

ROLLER TRACKS （ODM）

SURFACE : ● BK ○ WZ

R-40BH2B

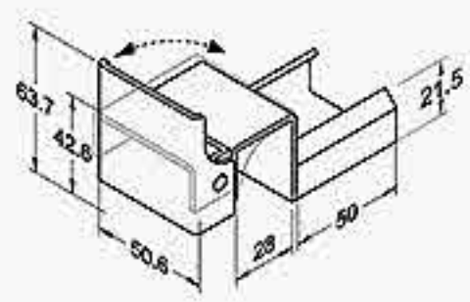

kg/Pc	0.167
Pc/Ctn	50

R-40BH4A

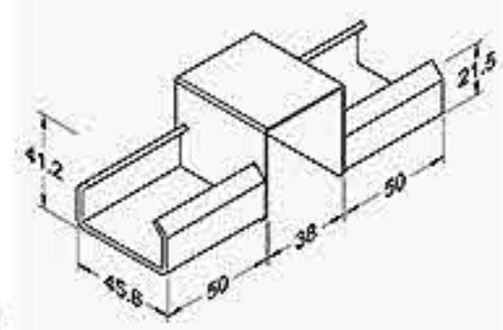

kg/Pc	0.213
Pc/Ctn	30

R-40BH4B

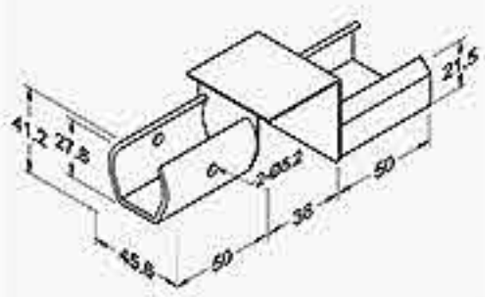

kg/Pc	0.190
Pc/Ctn	40

R-40H2A

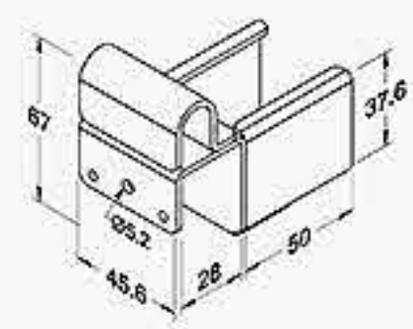

kg/Pc	0.234
Pc/Ctn	45

R-40H4A

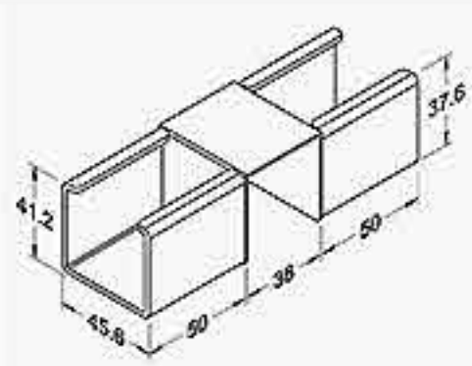

kg/Pc	0.290
Pc/Ctn	30

R-4040H1

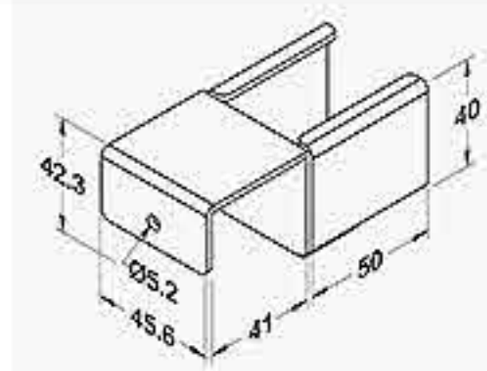

kg/Pc	0.220
Pc/Ctn	45

R-4040H3

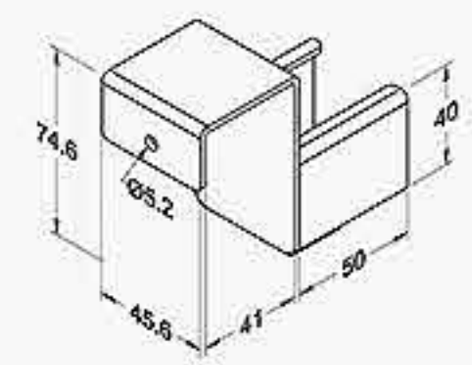

kg/Pc	0.250
Pc/Ctn	35

R-44H1

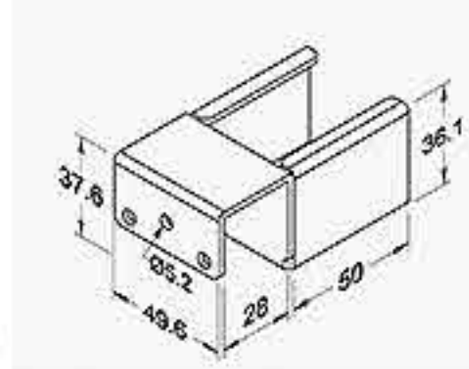

kg/Pc	0.186
Pc/Ctn	40

R-44H3

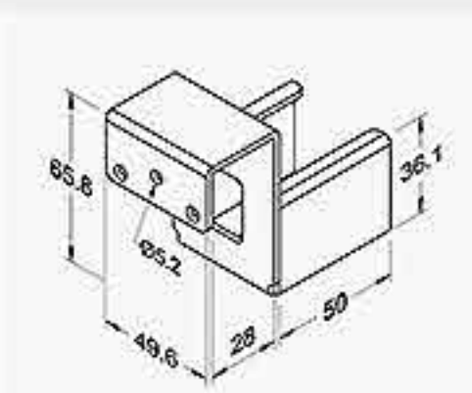

kg/Pc	0.220
Pc/Ctn	35

R-85H2A

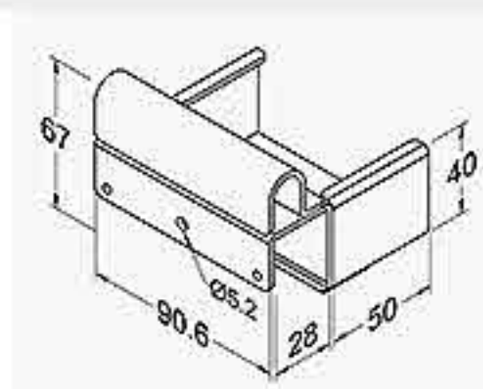

kg/Pc	0.405
Pc/Ctn	20

ROLLER TRACKS （R-60H）

R-60BH1

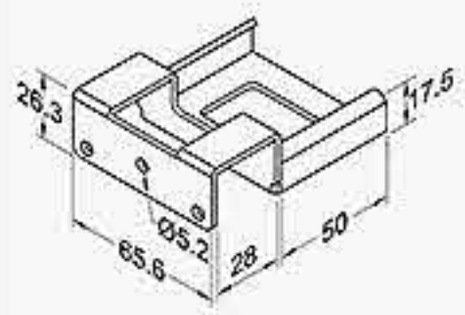

kg/Pc	0.220
Pc/Ctn	50

R-60BH2

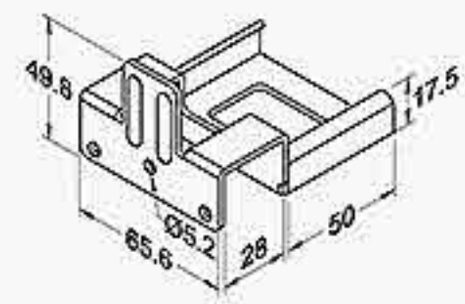

kg/Pc	0.300
Pc/Ctn	45

R-60BH3

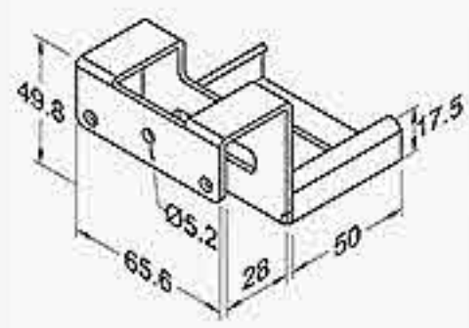

kg/Pc	0.240
Pc/Ctn	45

R-60BH4

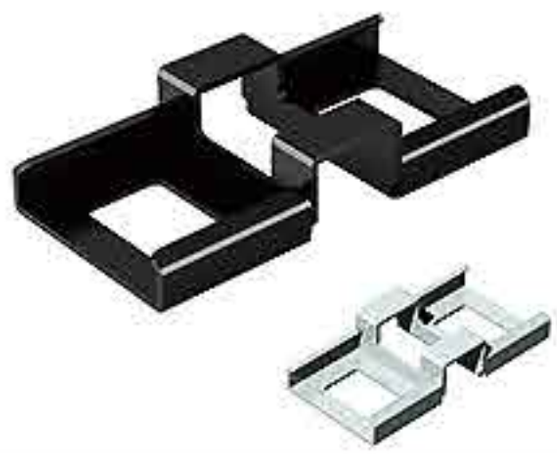

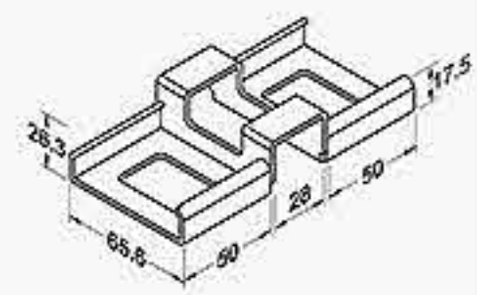

kg/Pc	0.263
Pc/Ctn	35

R-60BH5

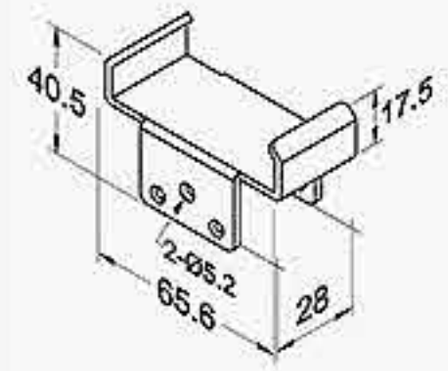

kg/Pc	0.140
Pc/Ctn	140

R-60BH6

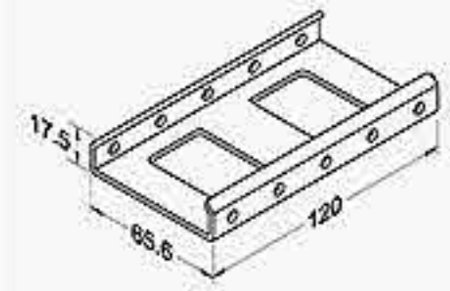

kg/Pc	0.215
Pc/Ctn	80

R-60BH6A

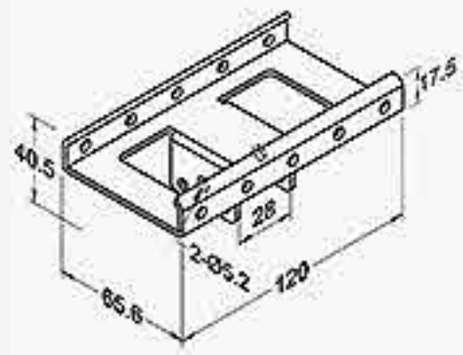

kg/Pc	0.267
Pc/Ctn	30

R-60BH31

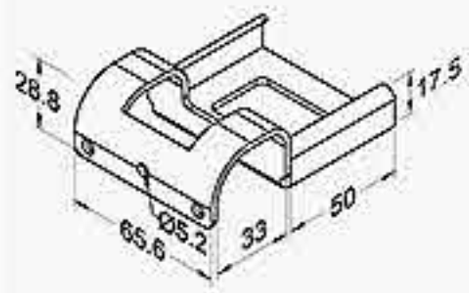

kg/Pc	0.267
Pc/Ctn	65

R-60BH33

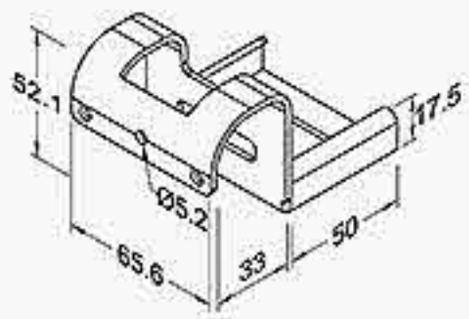

kg/Pc	0.267
Pc/Ctn	45

ROLLER TRACKS （R-80H）

SURFACE : ● BK ○ WZ

R-80BH1

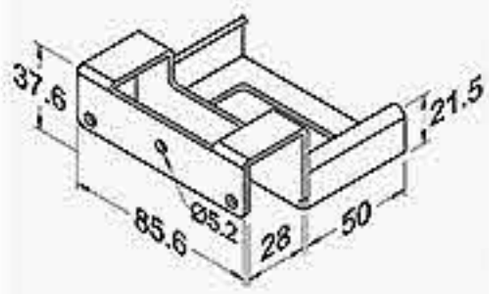

kg/Pc	0.220
Pc/Ctn	35

R-80BH2

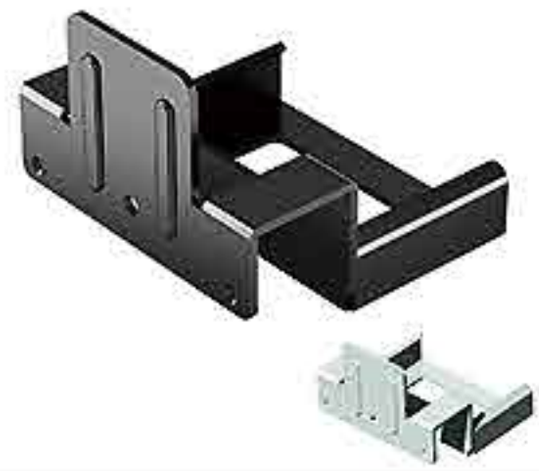

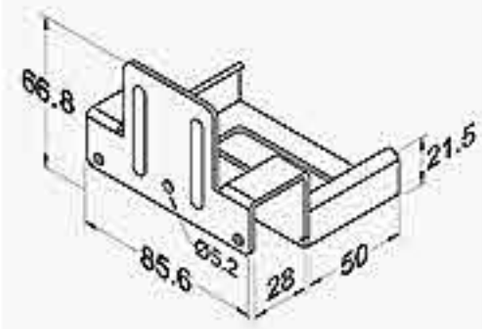

kg/Pc	0.300
Pc/Ctn	35

R-80BH3

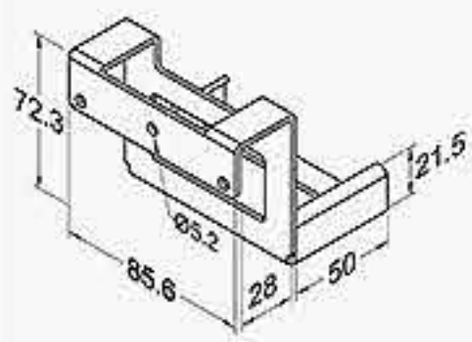

kg/Pc	0.240
Pc/Ctn	30

R-80BH4

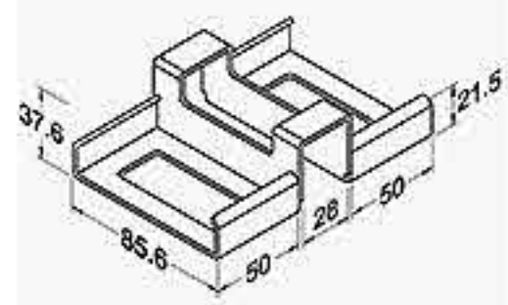

kg/Pc	0.263
Pc/Ctn	20

R-80BH5

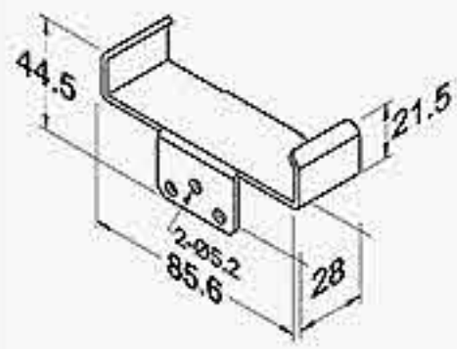

kg/Pc	0.140
Pc/Ctn	50

R-80BH6

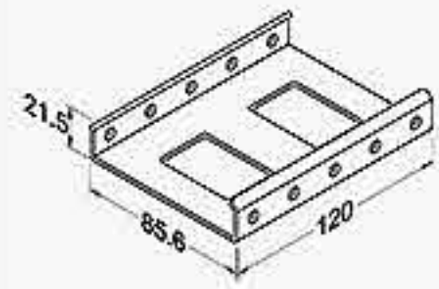

kg/Pc	0.215
Pc/Ctn	55

R-80BH6A

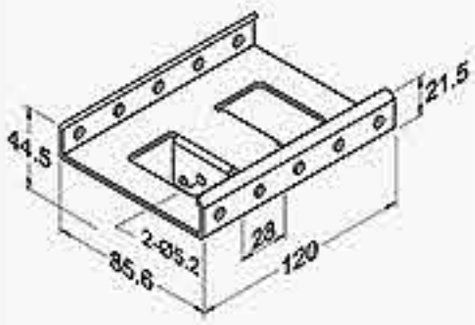

kg/Pc	0.267
Pc/Ctn	20

R-80BH31

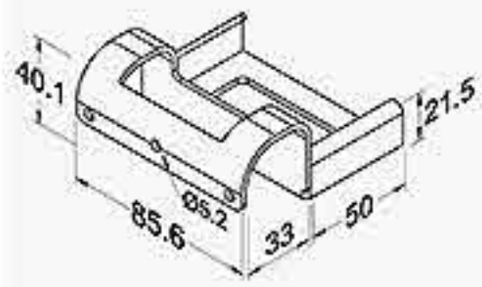

kg/Pc	0.267
Pc/Ctn	35

R-80BH33

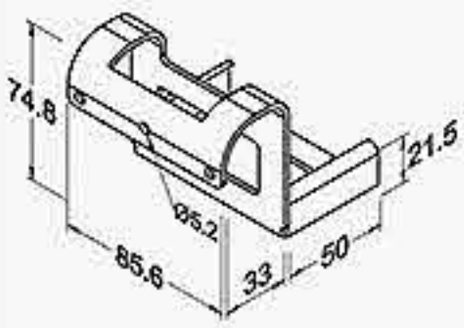

kg/Pc	0.267
Pc/Ctn	30

ROLLER TRACKS （R-85H）

R-85BH1

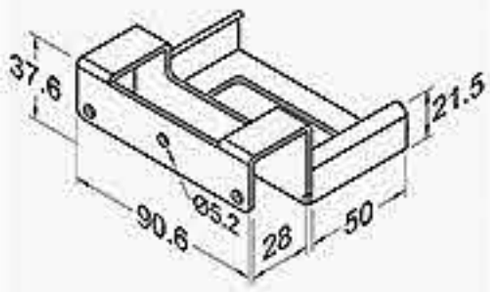

kg/Pc	0.220
Pc/Ctn	30

R-85BH2

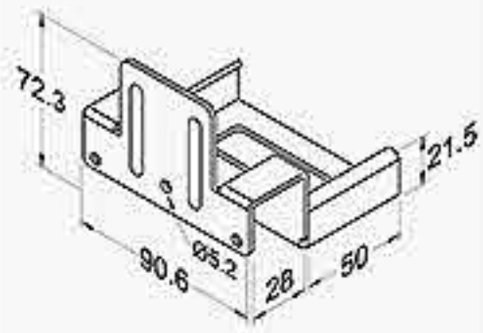

kg/Pc	0.300
Pc/Ctn	30

R-85BH3

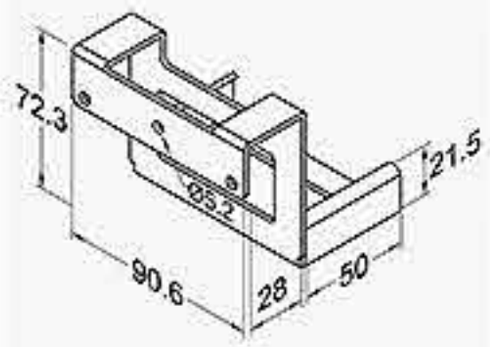

kg/Pc	0.240
Pc/Ctn	30

R-85BH4

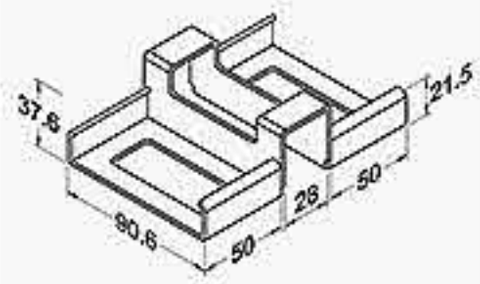

kg/Pc	0.263
Pc/Ctn	20

R-85BH5

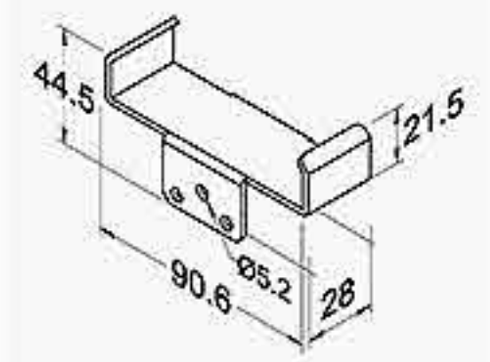

kg/Pc	0.140
Pc/Ctn	100

R-85BH6

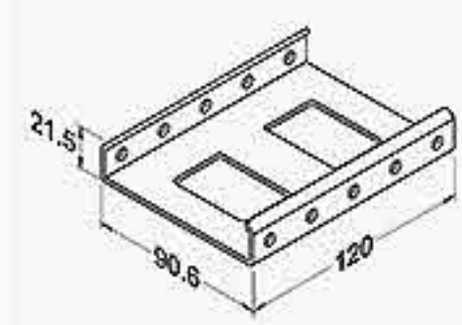

kg/Pc	0.215
Pc/Ctn	40

R-85BH6A

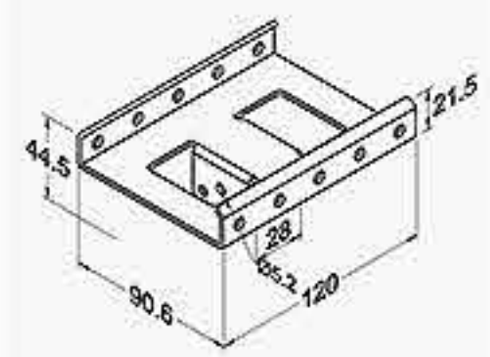

kg/Pc	0.267
Pc/Ctn	20

R-85BH31

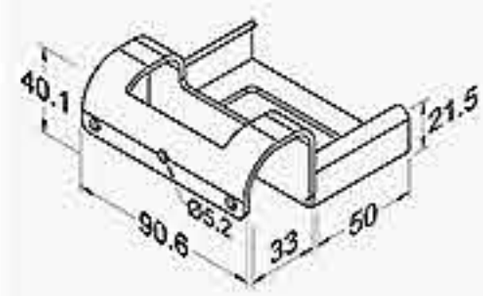

kg/Pc	0.267
Pc/Ctn	30

R-85BH33

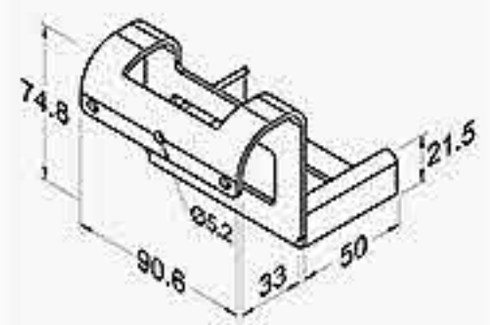

kg/Pc	0.267
Pc/Ctn	25

R Series

ROLLER TRACKS （R-85H）

SURFACE : ● BK ◎ WZ

R-85H1

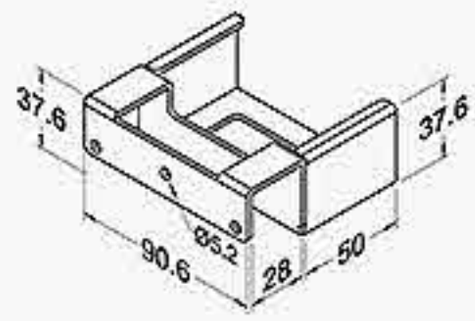

kg/Pc	0.220
Pc/Ctn	25

R-85H2

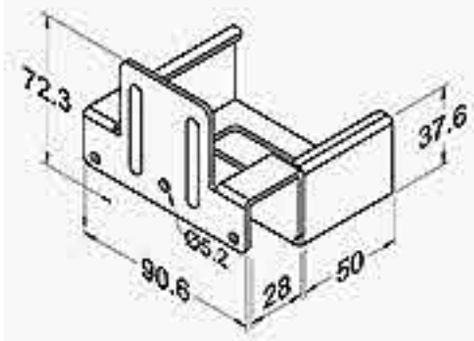

kg/Pc	0.300
Pc/Ctn	20

R-85H3

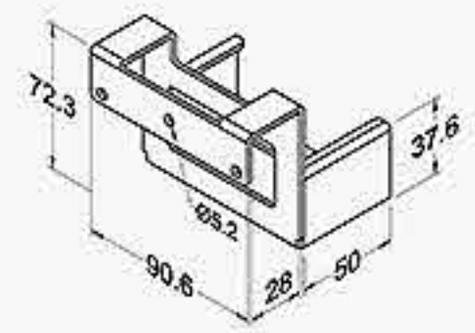

kg/Pc	0.240
Pc/Ctn	25

R-85H31

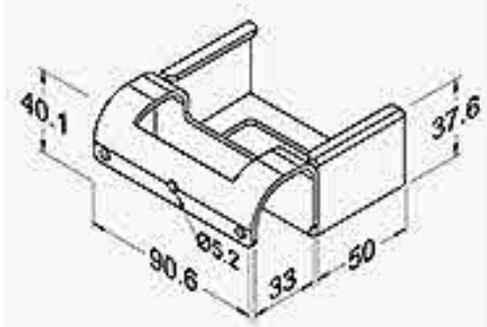

kg/Pc	0.300
Pc/Ctn	25

R-85H33

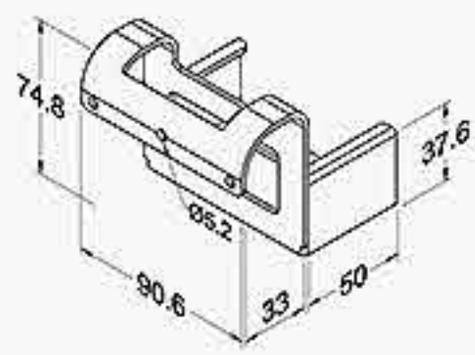

kg/Pc	0.240
Pc/Ctn	25

P Series

PLASTICS

PLASTICS

P-1

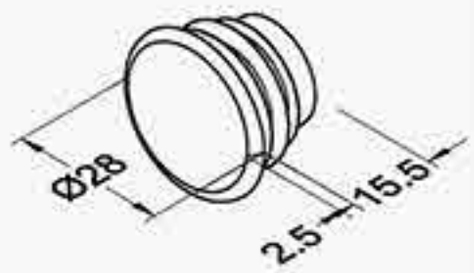

kg/Pc	0.003
Pc/Ctn	400

P-1A

kg/Pc	0.003
Pc/Ctn	400

P-2

kg/Pc	0.009
Pc/Ctn	200

P-2A

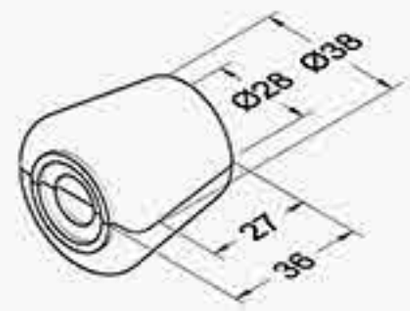

kg/Pc	0.017
Pc/Ctn	100

P-2B

kg/Pc	0.009
Pc/Ctn	200

P-3

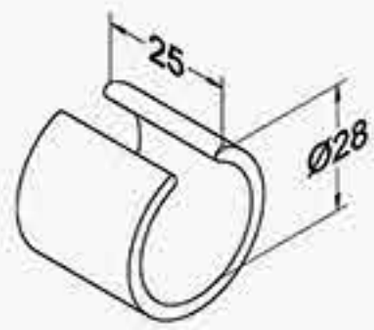

kg/Pc	0.005
Pc/Ctn	300

P-4

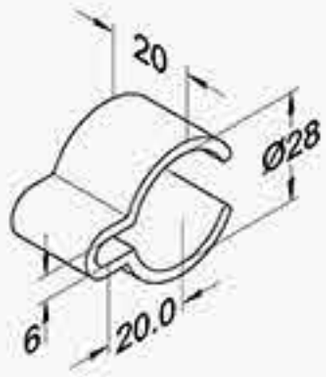

kg/Pc	0.005
Pc/Ctn	300

P-5

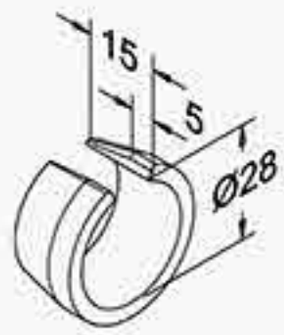

kg/Pc	0.003
Pc/Ctn	500

P-6

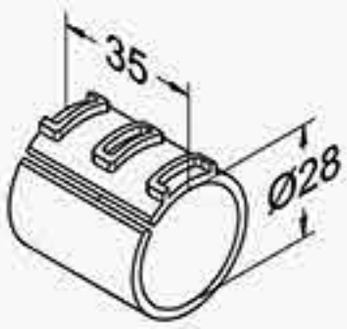

kg/Pc	0.006
Pc/Ctn	150

P-7

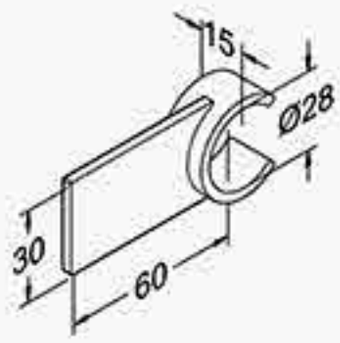

kg/Pc	0.010
Pc/Ctn	200

Unit : mm

P-7A

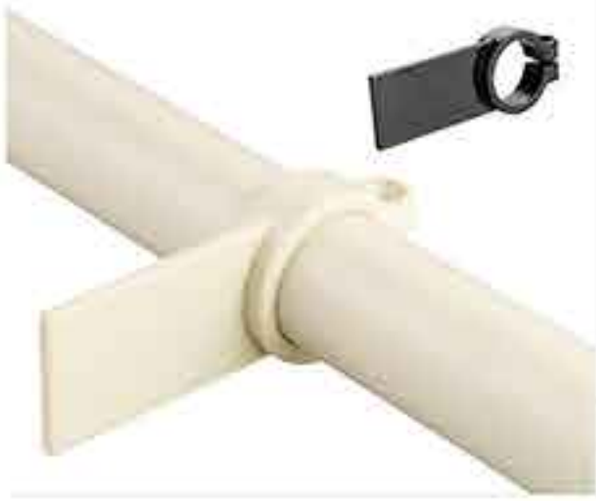

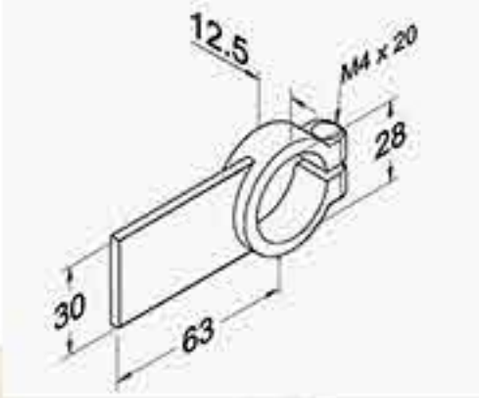

kg/Pc	0.012
Pc/Ctn	150

P-7B

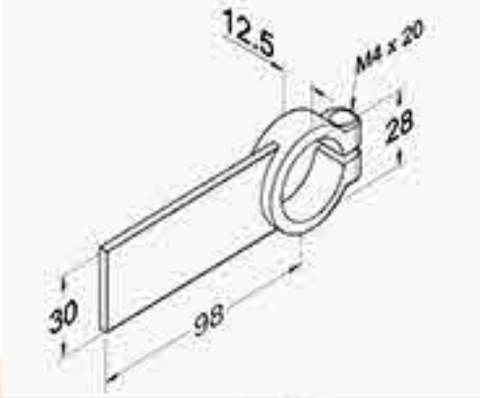

kg/Pc	0.013
Pc/Ctn	100

P-8

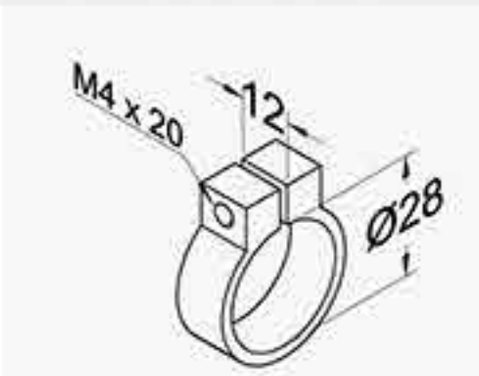

kg/Pc	0.005
Pc/Ctn	300

P-9

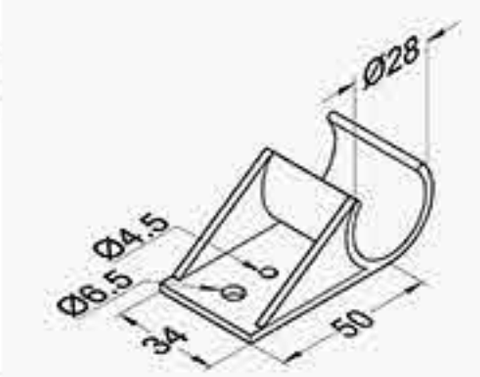

kg/Pc	0.014
Pc/Ctn	100

P-10

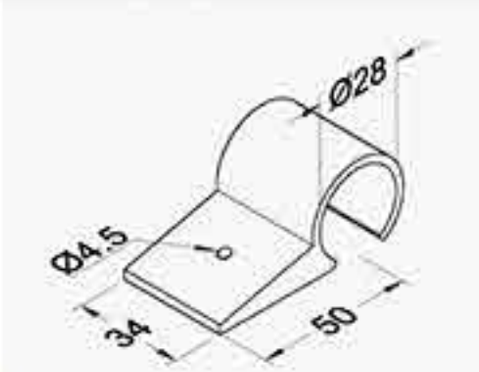

kg/Pc	0.014
Pc/Ctn	100

P-11

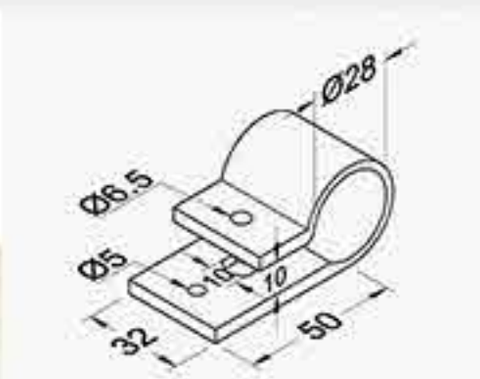

kg/Pc	0.018
Pc/Ctn	100

P-13

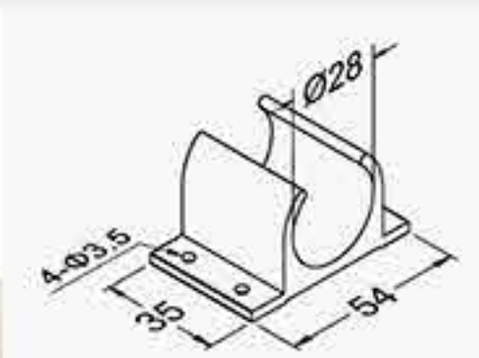

kg/Pc	0.014
Pc/Ctn	100

P-14

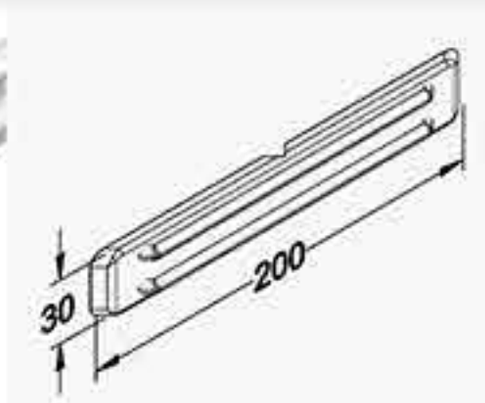

kg/Pc	0.042
Pc/Ctn	100

P-15

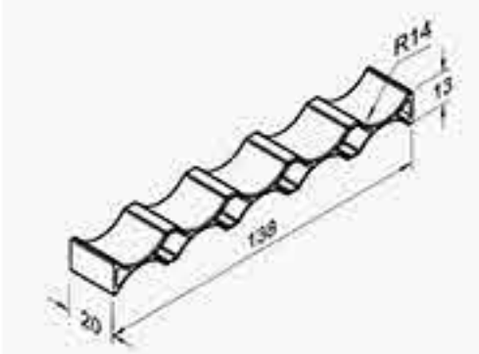

kg/Pc	0.008
Pc/Ctn	000

P-15A

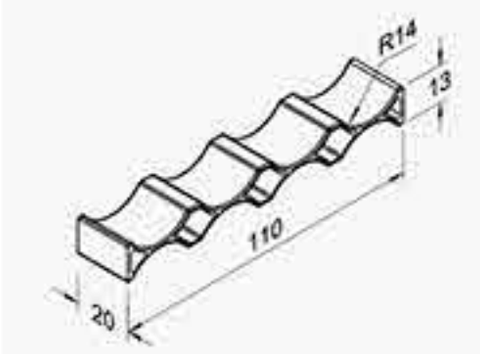

kg/Pc	0.007
Pc/Ctn	000

PLASTICS

P-L1

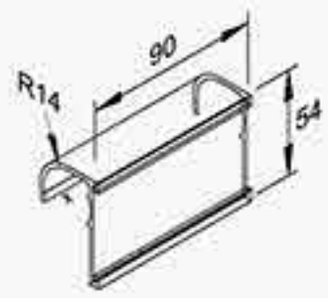

kg/Pc	0.040
Pc/Ctn	60

P-L1A

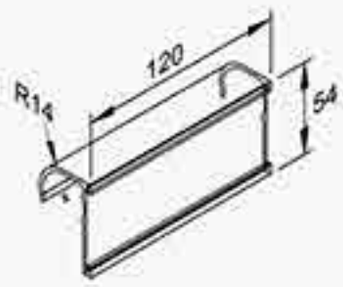

kg/Pc	0.053
Pc/Ctn	50

P-L2

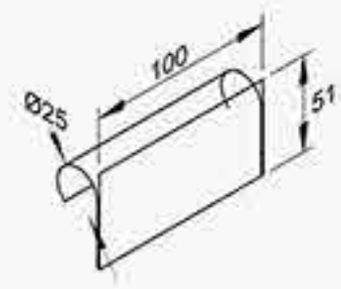

kg/Pc	0.014
Pc/Ctn	120

P-L2A

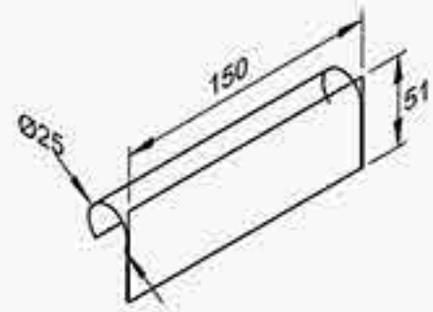

kg/Pc	0.022
Pc/Ctn	60

P-L2B

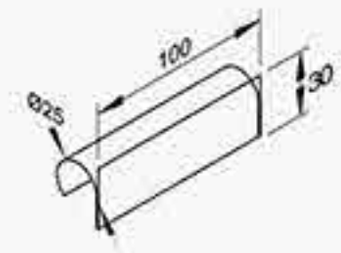

kg/Pc	0.013
Pc/Ctn	100

P-L2C

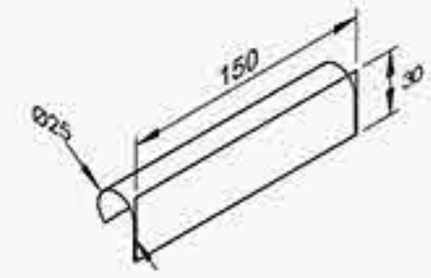

kg/Pc	0.020
Pc/Ctn	80

P-L2D

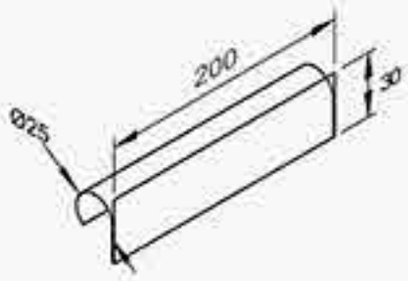

kg/Pc	0.026
Pc/Ctn	50

P-L3

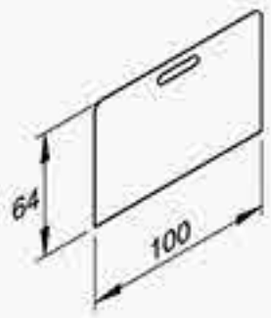

kg/Pc	0.006
Pc/Ctn	1000

P-L3A

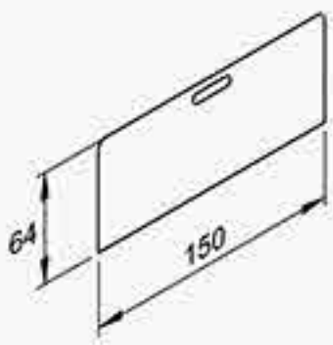

kg/Pc	0.009
Pc/Ctn	700

P-L3B

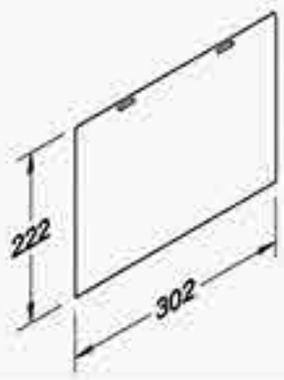

kg/Pc	0.088
Pc/Ctn	100

Unit : mm

P-L3C

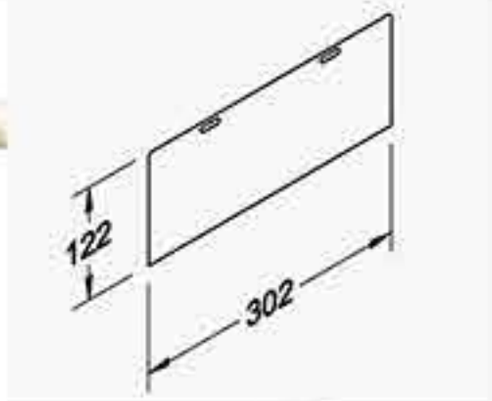

kg/Pc	0.045
Pc/Ctn	150

P-L3D

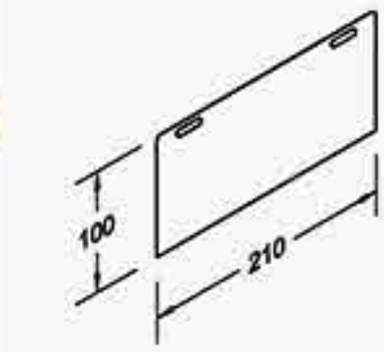

kg/Pc	0.029
Pc/Ctn	500

P-L4

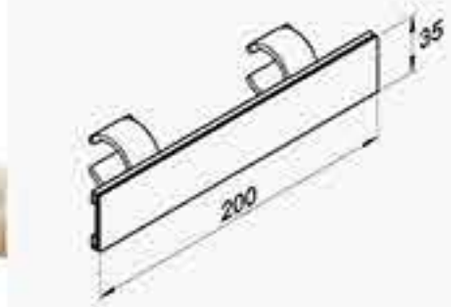

kg/Pc	0.045
Pc/Ctn	150

P-HJ2B

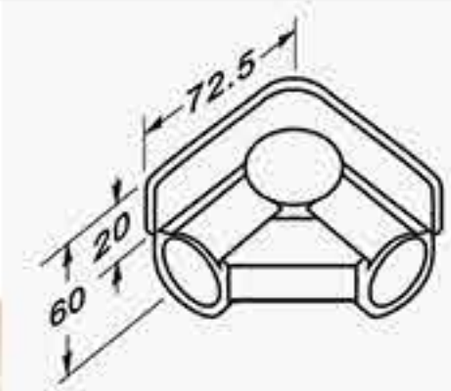

kg/Pc	0.057
Pc/Ctn	25

P-25

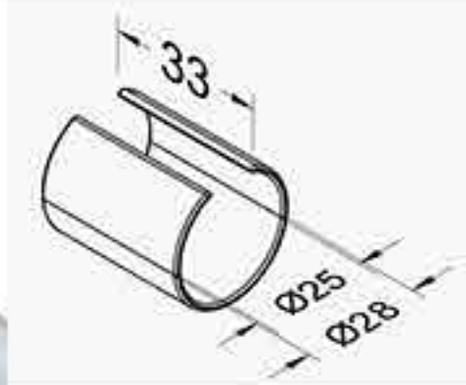

kg/Pc	0.006
Pc/Ctn	400

P-25 INSTRUCTIONS

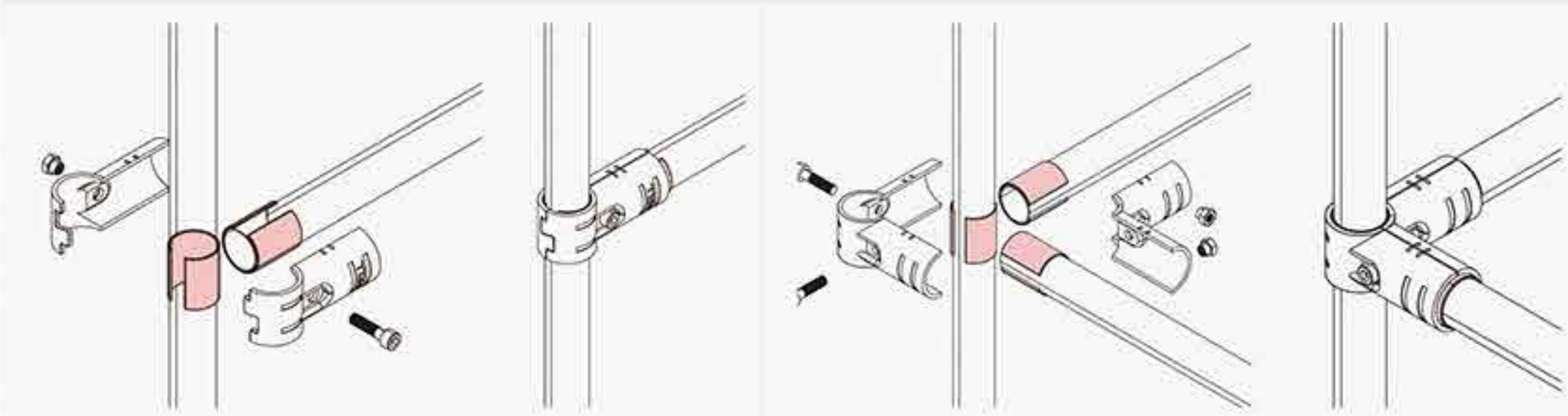

F Series

METAL ACCESSORIES

METAL ACCESSORIES

SURFACE : ●BK ○WZ

F-1

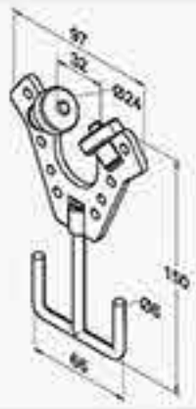

kg/Pc	0.158
Pc/Ctn	50

F-2

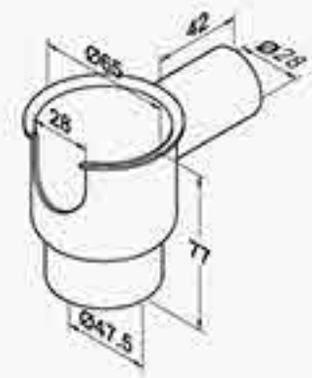

kg/Pc	0.200
Pc/Ctn	20

F-2A

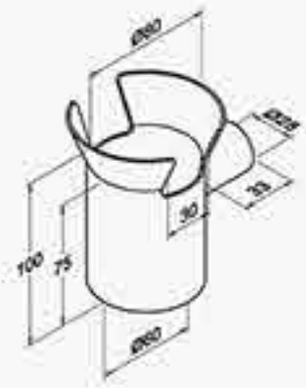

kg/Pc	0.250
Pc/Ctn	10

F-3

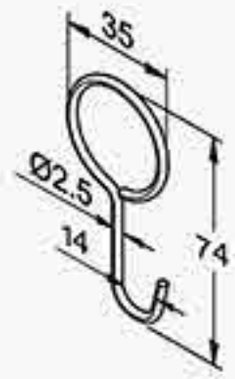

kg/Pc	0.006
Pc/Ctn	800

F-3A

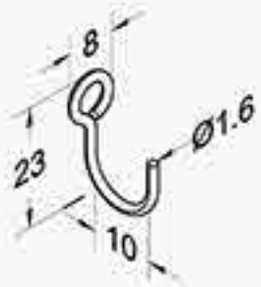

kg/Pc	0.001
Pc/Ctn	10000

F-3B

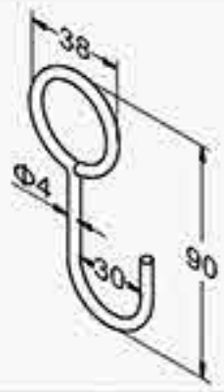

kg/Pc	0.020
Pc/Ctn	300

F-3C

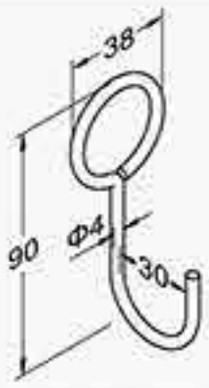

kg/Pc	0.020
Pc/Ctn	300

F-4

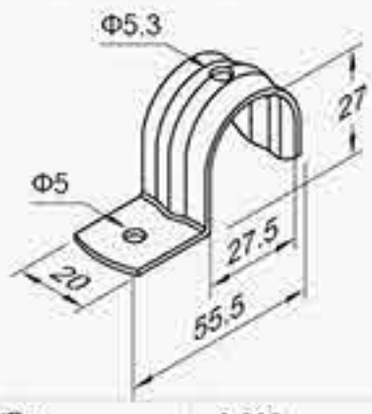

kg/Pc	0.020
Pc/Ctn	300

F-4A（Use with F-10/F-10A/F-21）

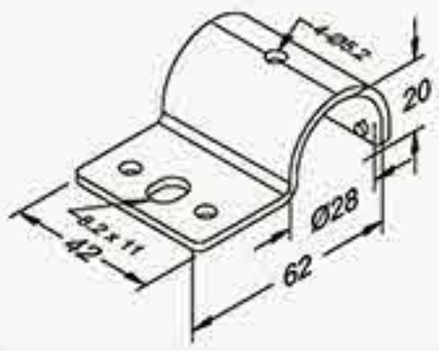

kg/Pc	0.070
Pc/Ctn	150

F-5

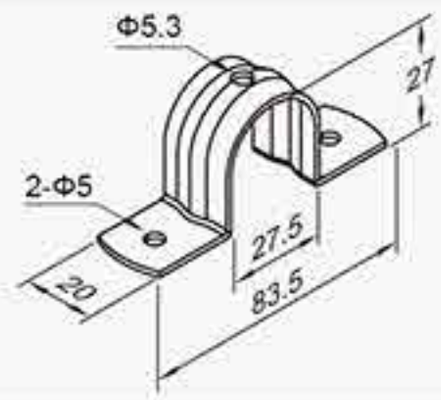

kg/Pc	0.026
Pc/Ctn	200

Unit : mm

F-6

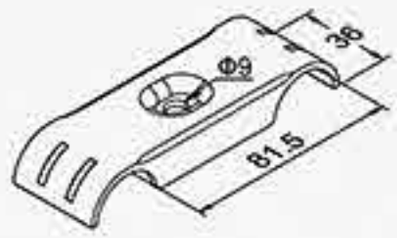

kg/Pc	0.104
Pc/Ctn	130

F-7

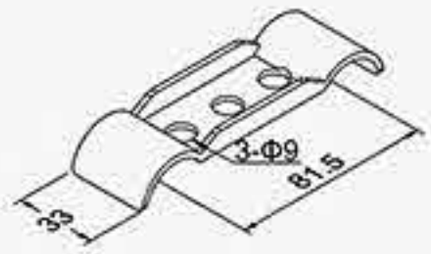

kg/Pc	0.079
Pc/Ctn	240

F-8

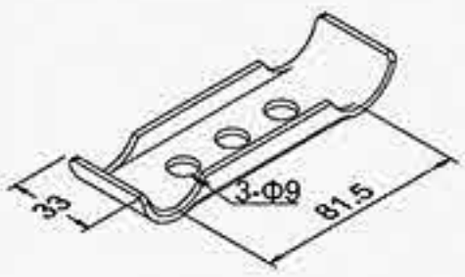

kg/Pc	0.082
Pc/Ctn	240

F-9

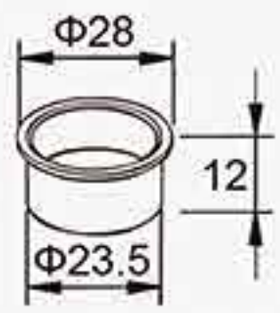

kg/Pc	0.013
Pc/Ctn	800

F-9A

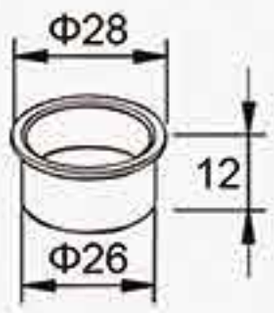

kg/Pc	0.013
Pc/Ctn	800

F-10 （Use with F-4A/F-10A/F-21）

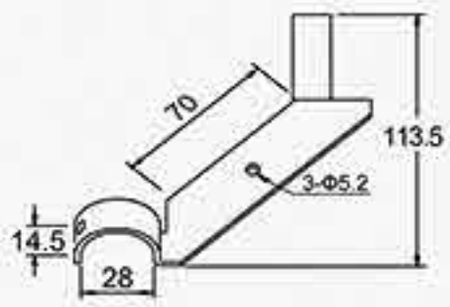

kg/Pc	0.072
Pc/Ctn	90

F-10A （Use with F-4A/F-10/F-21）

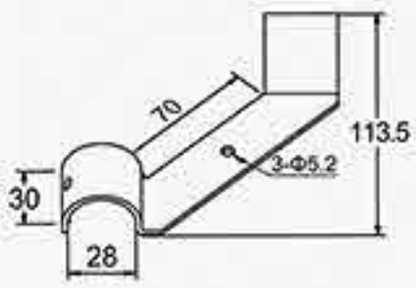

kg/Pc	0.106
Pc/Ctn	75

F-10B （Use with F-4A/F-10/F-21）

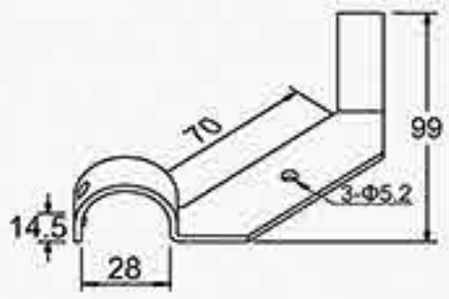

kg/Pc	0.065
Pc/Ctn	75

F-11

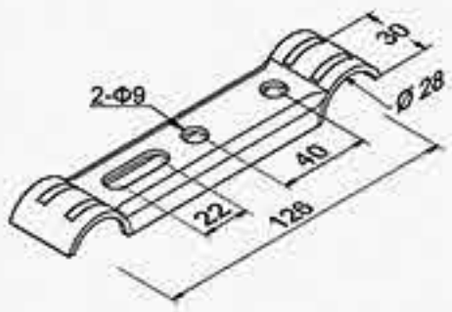

kg/Pc	0.108
Pc/Ctn	120

F-11A

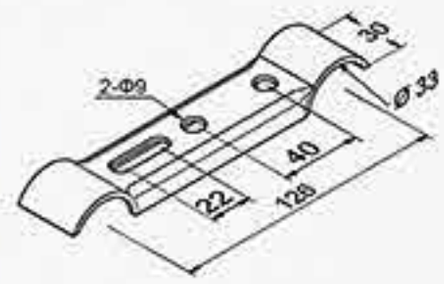

kg/Pc	0.109
Pc/Ctn	120

SURFACE : ●BK ○WZ

F-12A/F-12B/F-12C

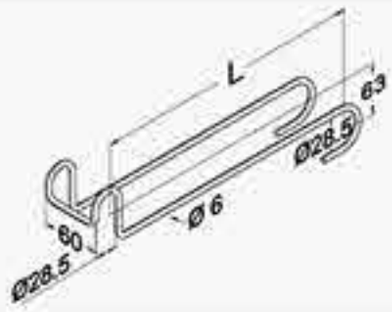

Part No.	F-12A	F-12B	F-12C
L(mm)	235	335	435
kg/Pc	0.183	0.225	0.255
Pc/Ctn	40	30	25

F-13A/F-13B/F-13C/F-13D

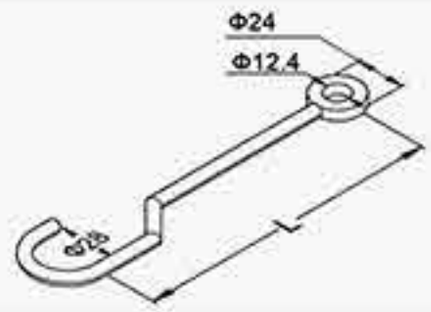

Part No.	F-13A	F-13B	F-13C	F-13D
L(mm)	60	100	150	200
kg/Pc	0.039	0.046	0.059	0.070
Pc/Ctn	350	230	180	150

F-14

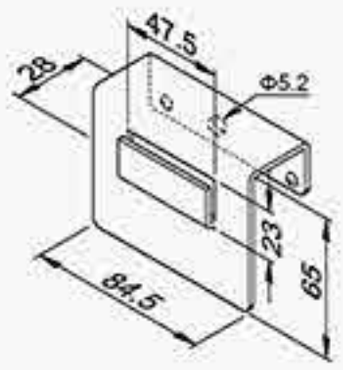

kg/Pc	0.188
Pc/Ctn	60

F-15

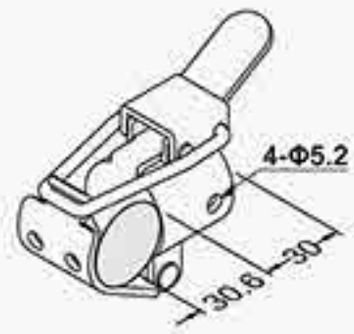

kg/Pc	0.145
Pc/Ctn	75

F-16

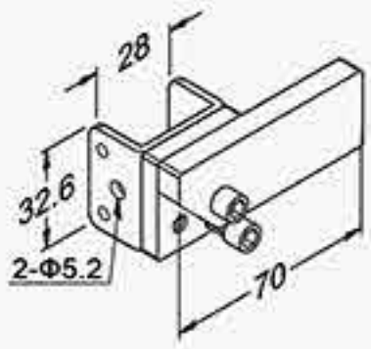

kg/Pc	0.230
Pc/Ctn	130

F-17

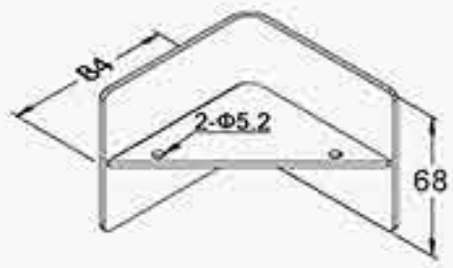

kg/Pc	0.275
Pc/Ctn	25

F-18

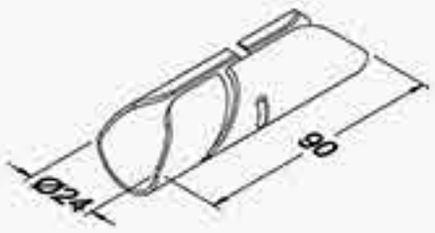

kg/Pc	0.040
Pc/Ctn	120

F-18A

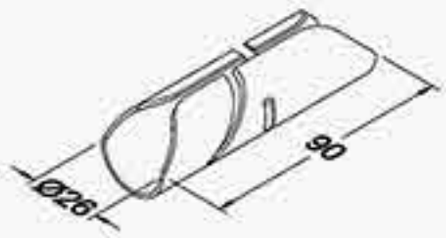

kg/Pc	0.040
Pc/Ctn	120

F-18B

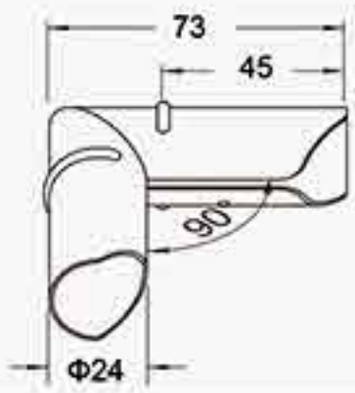

kg/Pc	0.050
Pc/Ctn	80

F-18C

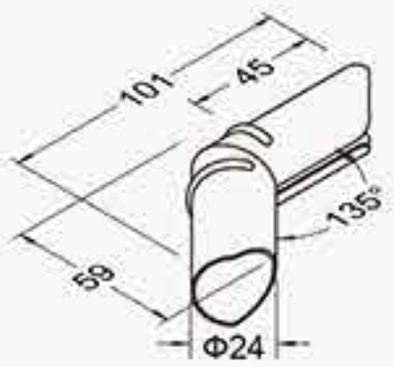

kg/Pc	0.050
Pc/Ctn	100

Unit : mm

F-19

kg/Pc	0.015
Pc/Ctn	200

F-20

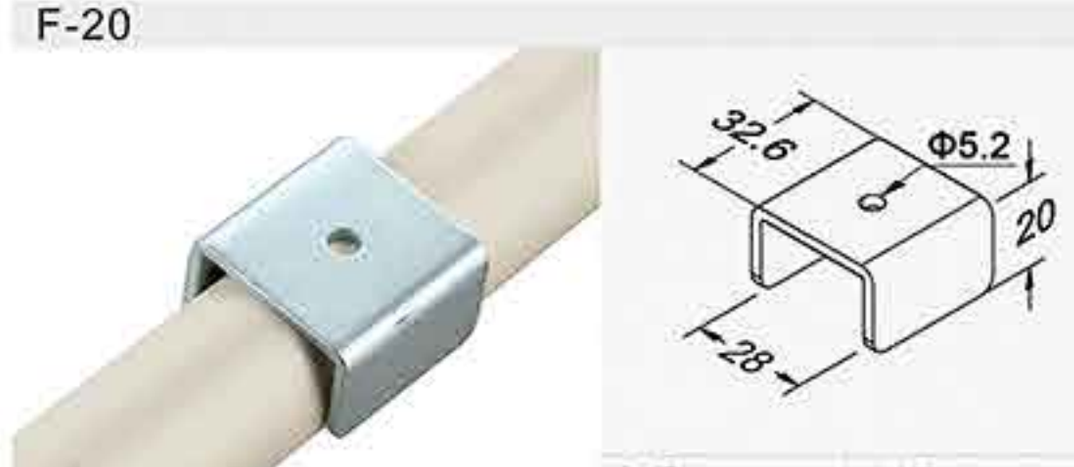

kg/Pc	0.037
Pc/Ctn	500

F-21（Use with F-4A/F-10/F-10A）

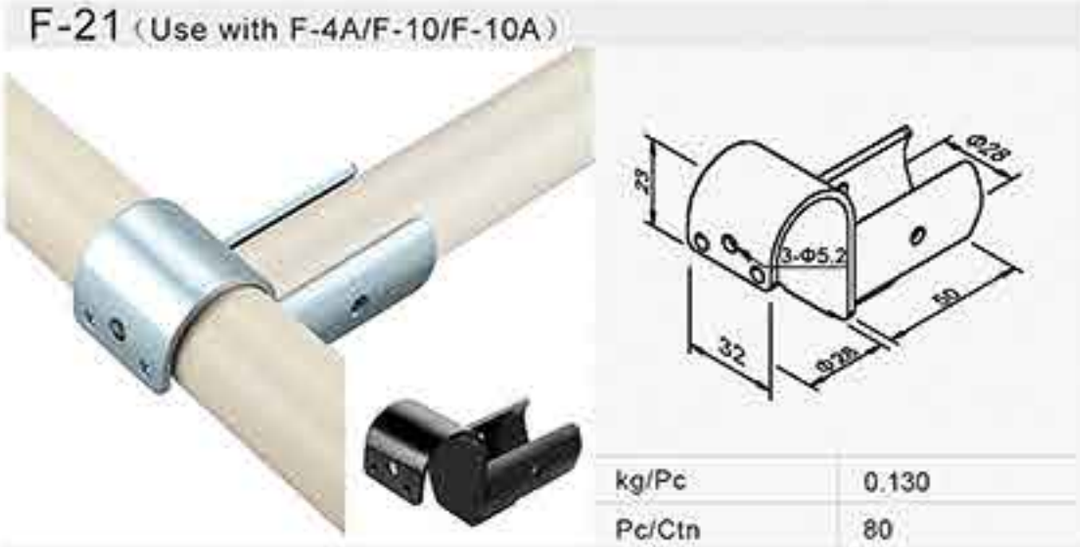

kg/Pc	0.130
Pc/Ctn	80

F-22

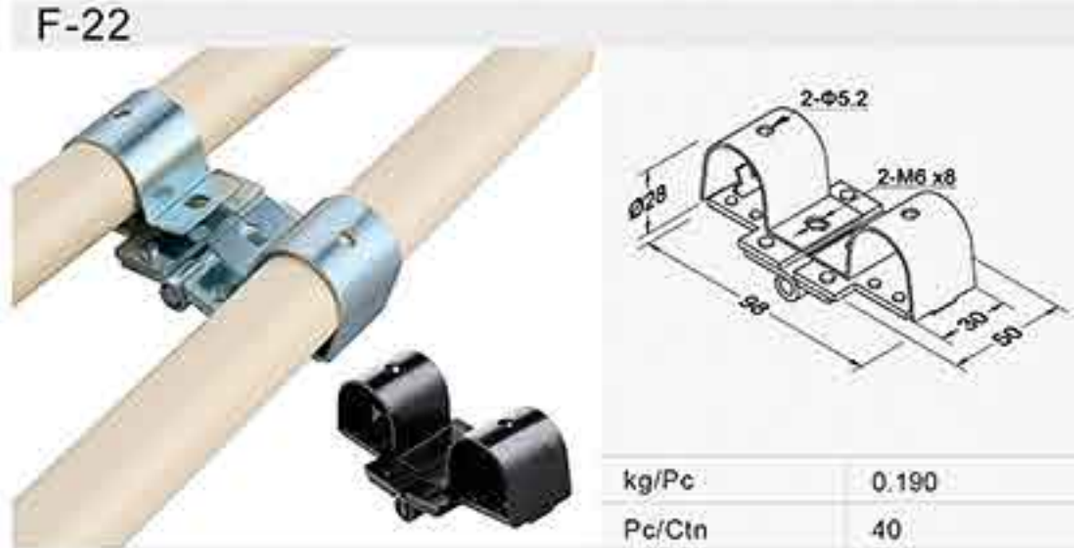

kg/Pc	0.190
Pc/Ctn	40

F-24A

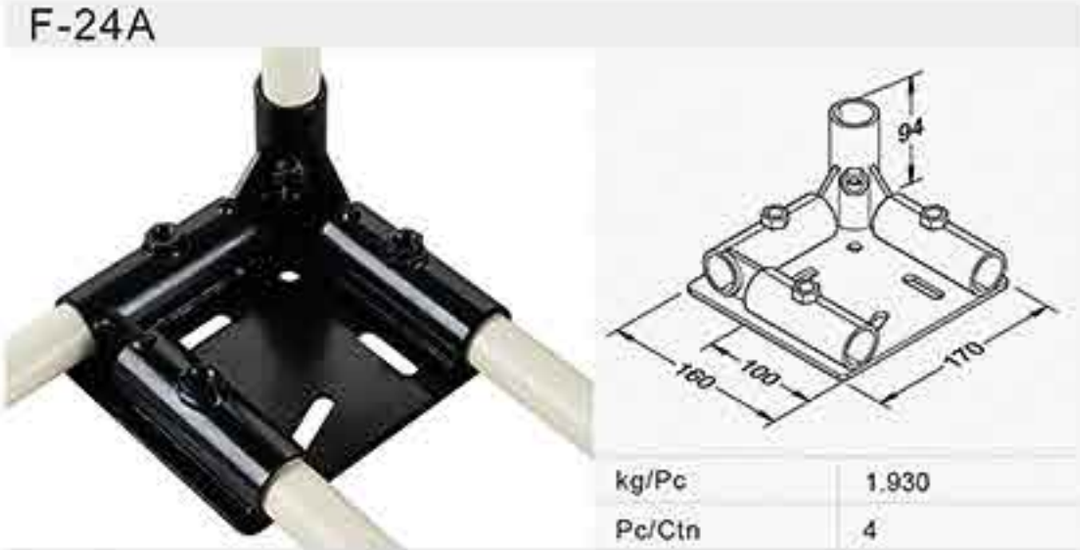

kg/Pc	1.930
Pc/Ctn	4

F-24B

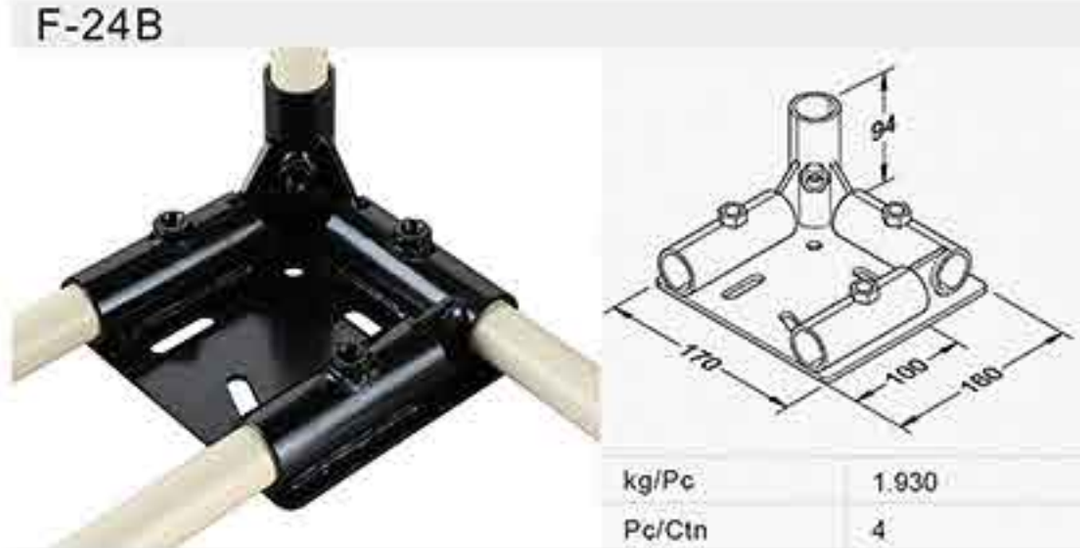

kg/Pc	1.930
Pc/Ctn	4

F-25A

kg/Pc	0.075
Pc/Ctn	120

F-25B

kg/Pc	0.073
Pc/Ctn	120

F-25C

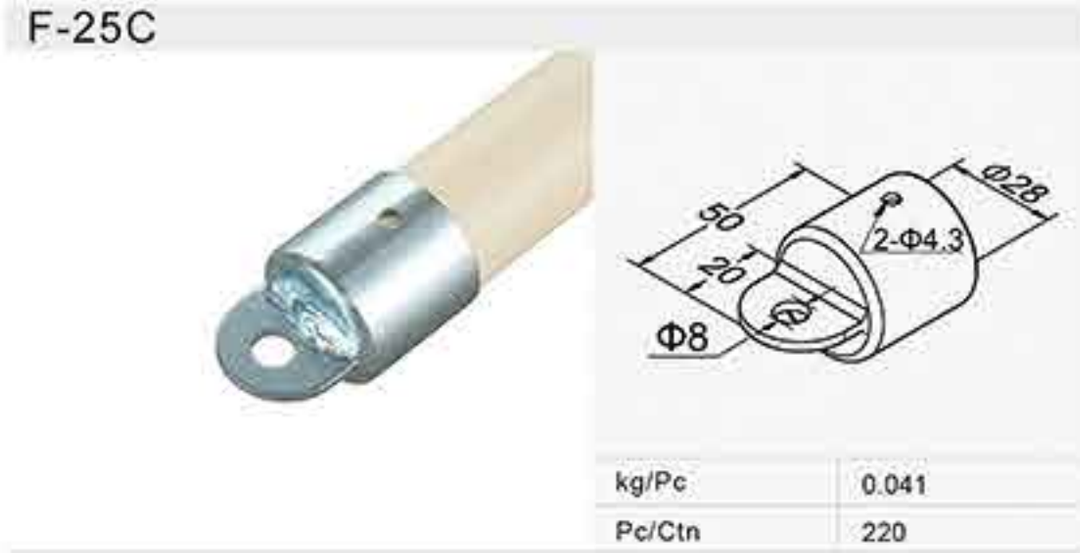

kg/Pc	0.041
Pc/Ctn	220

F-26

kg/Pc	0.009
Pc/Ctn	400

SURFACE : ●BK ○WZ

F-27

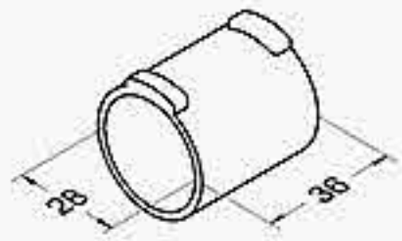

kg/Pc	0.020
Pc/Ctn	150

F-28

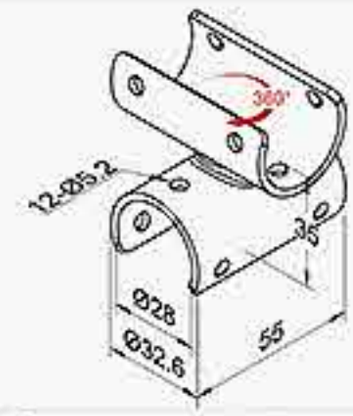

kg/Pc	0.125
Pc/Ctn	80

F-30

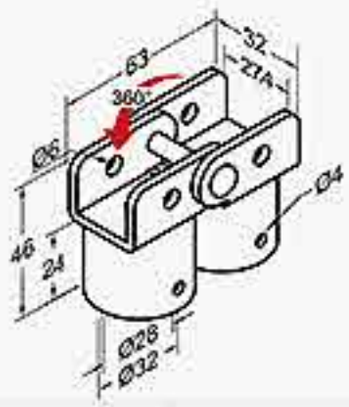

kg/Pc	0.150
Pc/Ctn	150

F-31

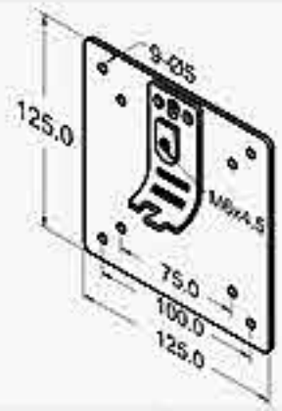

kg/Pc	0.150
Pc/Ctn	150

L Series

LEVELING FEET

METAL ACCESSORIES

SURFACE : ●BK ○WZ

L-1

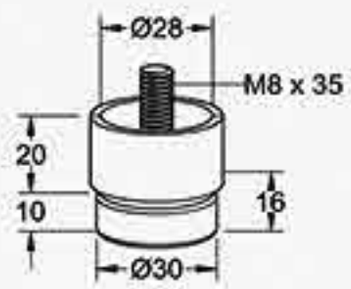

kg/Pc	0.043
Pc/Ctn	180

L-2

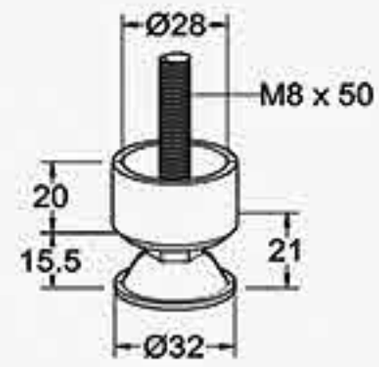

kg/Pc	0.052
Pc/Ctn	140

L-2A

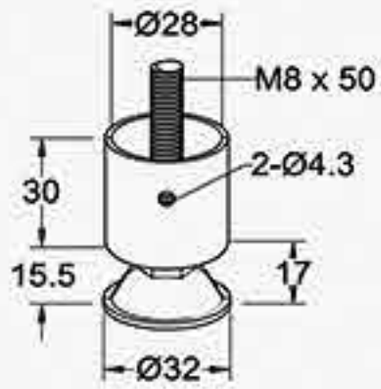

kg/Pc	0.068
Pc/Ctn	130

L-3

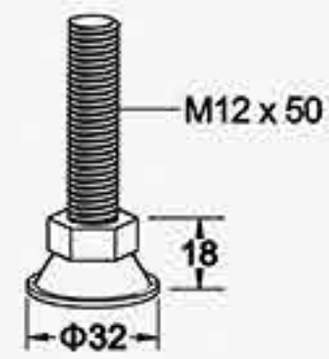

kg/Pc	0.071
Pc/Ctn	200

L-3A

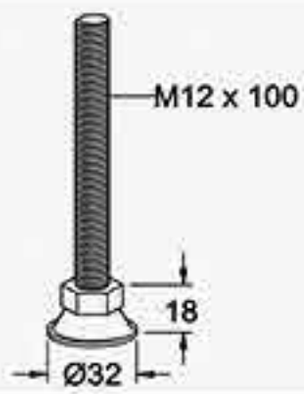

kg/Pc	0.104
Pc/Ctn	130

L-3B

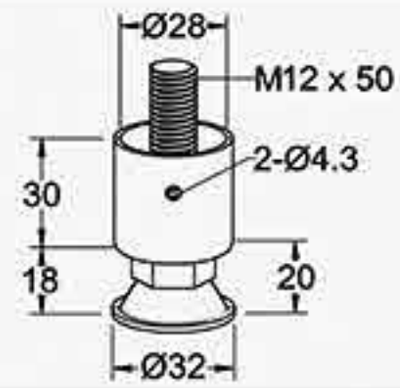

kg/Pc	0.100
Pc/Ctn	120

L-3C

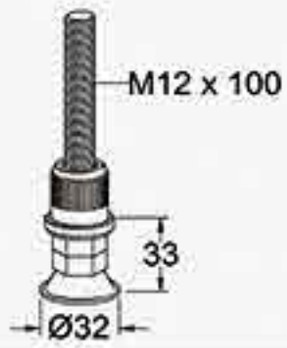

Part No.	L-3CCP10	L-3CCP12
kg/Pc	0.191	0.191
Pc/Ctn	100	100

L-3D

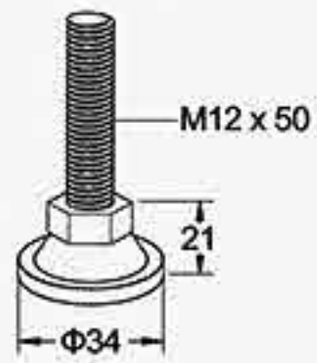

kg/Pc	0.074
Pc/Ctn	200

L-4

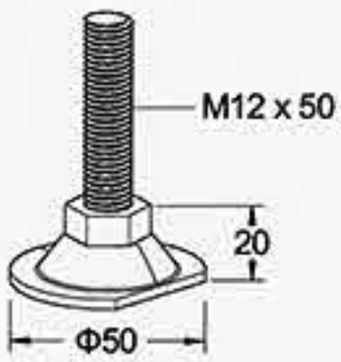

kg/Pc	0.094
Pc/Ctn	120

L-4A

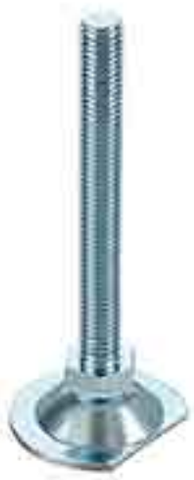

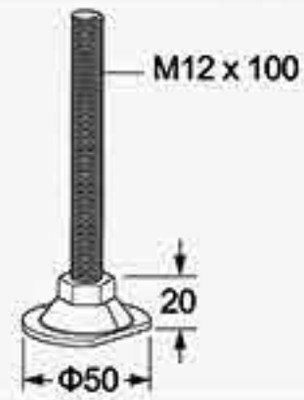

kg/Pc	0.129
Pc/Ctn	80

L-4B

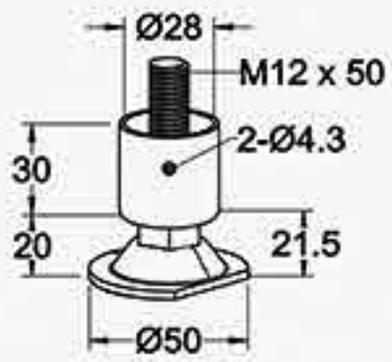

kg/Pc	0.125
Pc/Ctn	85

L-4C

Part No.	L-4CCP10	L-4CCP12
kg/Pc	0.215	0.215
Pc/Ctn	70	70

L-4D

kg/Pc	0.094
Pc/Ctn	120

L-4E

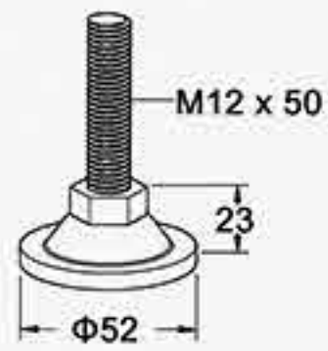

kg/Pc	0.105
Pc/Ctn	100

L-4F

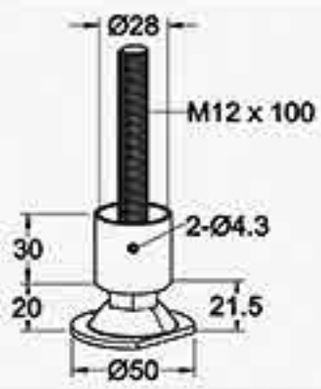

kg/Pc	0.180
Pc/Ctn	100

L-5

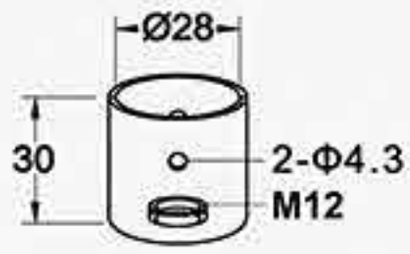

kg/Pc	0.033
Pc/Ctn	200

L-6

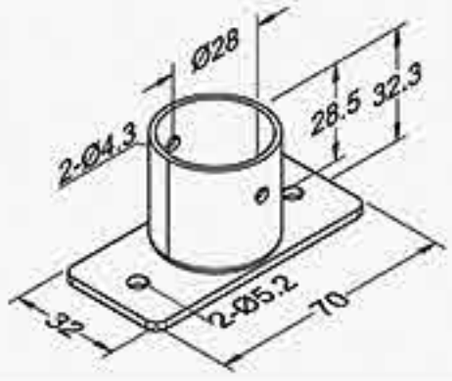

kg/Pc	0.073
Pc/Ctn	120

L-6A

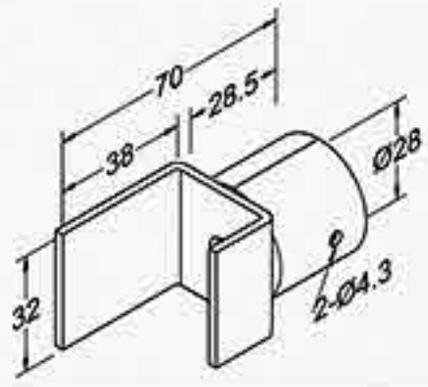

kg/Pc	0.083
Pc/Ctn	140

L-6B

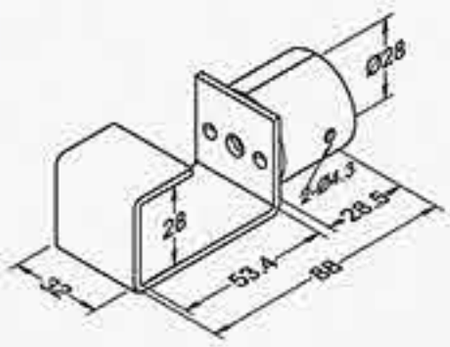

kg/Pc	0.112
Pc/Ctn	100

L-6C

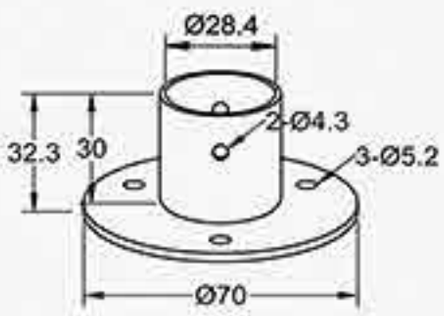

kg/Pc	0.103
Pc/Ctn	80

SURFACE : ●BK ○ WZ

L-7

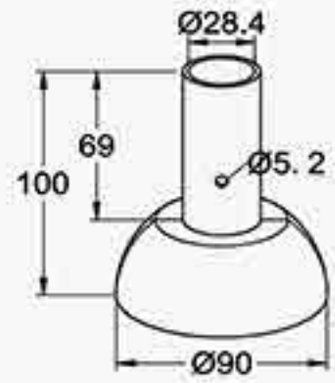

kg/Pc	0.395
Pc/Ctn	15

L-8

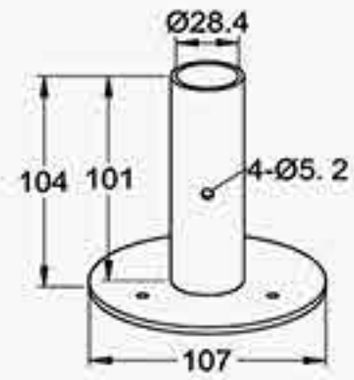

kg/Pc	0.460
Pc/Ctn	15

L-9

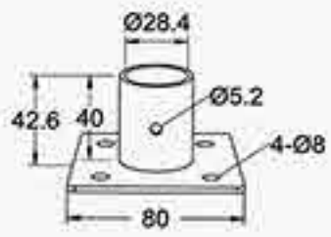

kg/Pc	0.230
Pc/Ctn	30

L-10

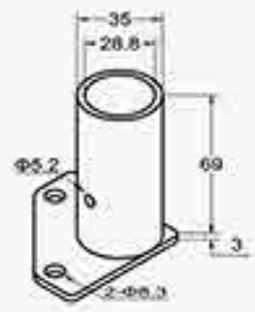

kg/Pc	0.235
Pc/Ctn	30

L-11

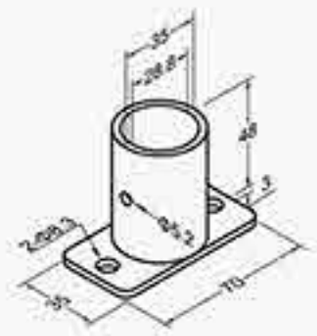

kg/Pc	0.170
Pc/Ctn	60

N Series

FASTENERS

SURFACE : ● BZ ● BL ○ WZ

Picture	Part No.	Desc.	Surface	kg/Pc	Pc/Ctn	Apply
N-1						
	N-1M6BZ	Nut	BZ	0.002	5400	Bolt
	N-1M6BL		BL			
	N-1M6WZ		WZ			
	N-1ENBZ	Nut	BZ	0.002	5400	Inch Bolt
	N-1ENWZ		WZ			
N-2						
	N-2BZ	Bolt	BZ	0.007	2700	Nut
	N-2BL		BL			
	N-2WZ		WZ			
	N-2ENBZ	Bolt	BZ	0.007	2700	Inch Nut
	N-2ENWZ		WZ			
N-2						
	N-2M612BZ	Bolt	BZ	0.005	4000	Nut
	N-2M612WZ		WZ			
N-3						
	N-3M840WZ	Bolt	WZ	0.017	1200	M8 Nut
N-6						
	N-6M8WZ	Nylon Nut	WZ	0.002	4000	M8 Bolt

Picture	Part No.	Classification	Application	kg/Pc	Pc/Ctn	Apply
N-8 (1/2)						
	N-8CP07WZ (1/2)	Coated Pipe	Φ28 x T0.7	0.075	350	Φ24.6
	N-8CP10WZ (1/2)		Φ28 x T1.0			Φ24.0
	N-8SUS07WZ (1/2)	SUS Pipe	Φ28 x T0.7	0.084	320	Φ26.4
N-8A (M10)						
	N-8ACP10M10WZ	Coated Pipe	Φ28 x T1.0	0.075	350	Φ24.0
	N-8ASUS09M10WZ	SUS Pipe	Φ28 x T0.9	0.084	320	Φ26.0
	N-8ASUS11M10WZ		Φ28 x T1.1	0.090		Φ25.6
N-8A (M12)						
	N-8ACP07M12WZ	Coated Pipe	Φ28 x T0.7	0.075	350	Φ24.6
	N-8ACP10M12WZ		Φ28 x T1.0			Φ24.0
	N-8ACP14M12WZ		Φ28 x T1.4			Φ23.2
	N-8ACP20M12WZ		Φ28 x T2.0			Φ22.0
	N-8ASUS07M12WZ	SUS Pipe	Φ28 x T0.7	0.084	320	Φ26.4
	N-8ASUS09M12WZ		Φ28 x T0.9	0.090		Φ26.0
	N-8ASUS11M12WZ		Φ28 x T1.1			Φ25.6

Picture	Part No.	Classification	Application	kg/Pc	Pc/Ctn	Apply
N-9						
	N-9M5BZ	Srew Set	NA	0.030	250	Srew Set
N-11						
	N-11CPM12AL	Coated Pipe	Φ28 x T0.7	0.026	350	Φ20.4
			Φ28 x T0.9			
	N-11CP 1/2 AL		Φ28 x T1.0			
			Φ28 x T1.4			
			Φ28 x T2.0			
	N-11SUSM12AL	SUS Pipe	Φ28 x T0.7	0.037	350	Φ23.3
	N-11SUS 1/2 AL		Φ28 x T0.9			
			Φ28 x T1.1			

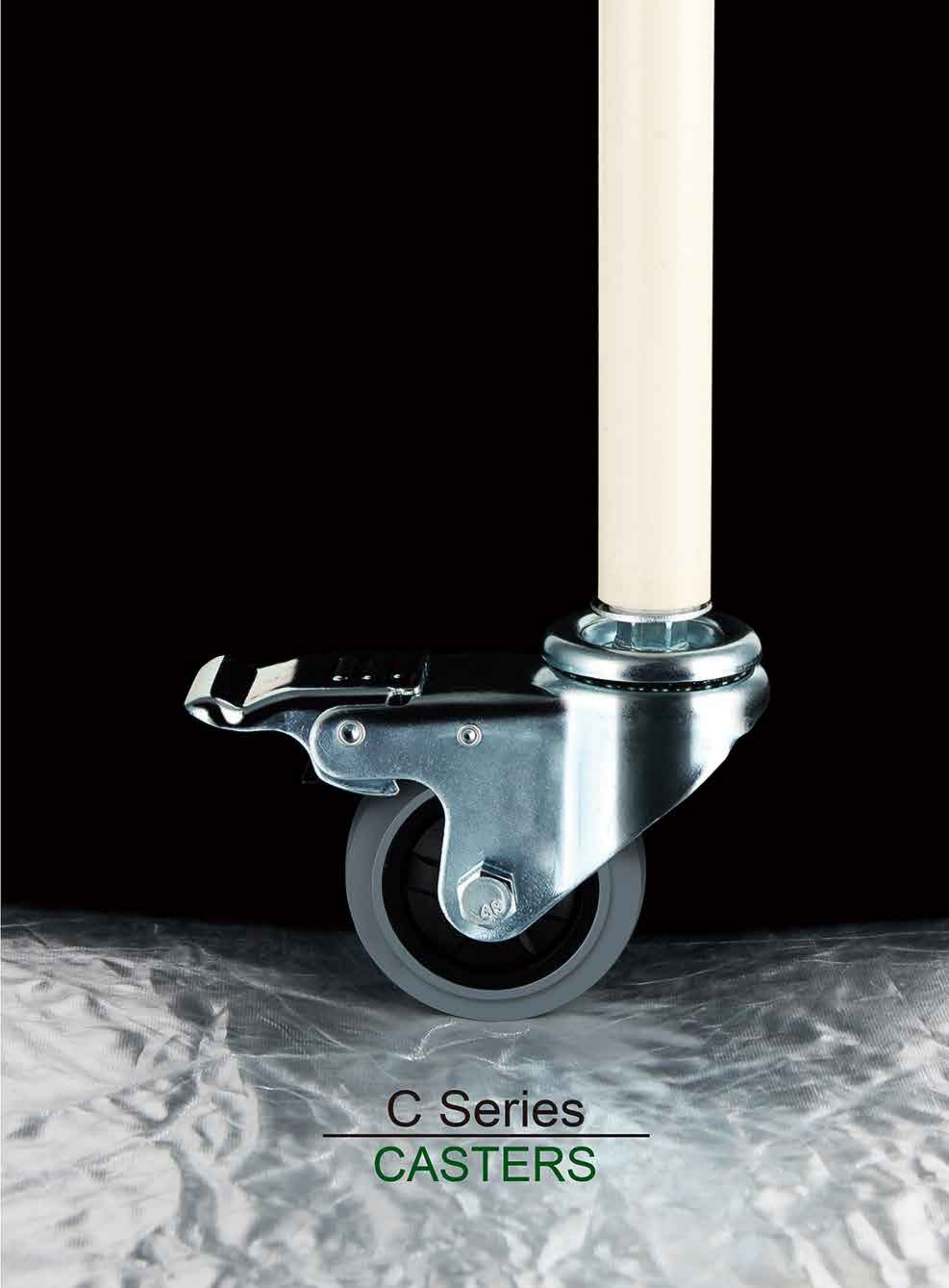

C Series

CASTERS

CASTERS

Picture		Part No.	(mm)	Wheel Material	(mm)	(kg)	(mm)	(mm)
C-3								
		C-3TPR75G	75	TPR	32	100	104	M12 X 60
		C-3TPR75GCP	75	TPR	32	100	104	M12 X 60
		C-3TPR75GSUS	75	TPR	32	100	104	M12 X 60
C-4								
		C-4TPR50G	50	TPR	32	100	90	M12 X 60
		C-4TPR50GCP	50	TPR	32	100	90	M12 X 60
		C-4TPR50GSUS	50	TPR	32	100	90	M12 X 60
		C-4TPR75G	75	TPR	32	100	104	M12 X 60
		C-4TPR75GCP	75	TPR	32	100	104	M12 X 60
		C-4TPR75GSUS	75	TPR	32	100	104	M12 X 60
		C-4TPR100G	100	TPR	32	130	130	M12 X 60
		C-4TPR100GCP	100	TPR	32	130	130	M12 X 60
		C-4TPR100GSUS	100	TPR	32	130	130	M12 X 60
C-4A								
		C-4ATPR75G	75	TPR	32	100	104	M12 X 60
		C-4ATPR75GCP	75	TPR	32	100	104	M12 X 60
		C-4ATPR75GSUS	75	TPR	32	100	104	M12 X 60
		C-4ATPR100G	100	TPR	32	130	130	M12 X 60
		C-4ATPR100GCP	100	TPR	32	130	130	M12 X 60
		C-4ATPR100GSUS	100	TPR	32	130	130	M12 X 60
C-4 ESD								
		C-4TPRESD75G	75	TPR	32	100	104	M12 X 60
		C-4TPRESD75GCP	75	TPR	32	100	104	M12 X 60
		C-4TPRESD75GSUS	75	TPR	32	100	104	M12 X 60
		C-4TPRESD100G	100	TPR	32	130	130	M12 X 60
		C-4TPRESD100GCP	100	TPR	32	130	130	M12 X 60
		C-4TPRESD100GSUS	100	TPR	32	130	130	M12 X 60
C-4A ESD								
		C-4ATPRESD75G	75	TPR	32	100	104	M12 X 60
		C-4ATPRESD75GCP	75	TPR	32	100	104	M12 X 60
		C-4ATPRESD75GSUS	75	TPR	32	100	104	M12 X 60
		C-4ATPRESD100G	100	TPR	32	130	130	M12 X 60
		C-4ATPRESD100GCP	100	TPR	32	130	130	M12 X 60
		C-4ATPRESD100GSUS	100	TPR	32	130	130	M12 X 60

Picture	Part No.	(mm)	Wheel Material	(mm)	(kg)	(mm)	(mm)	(mm)
C-5								
	C-5TPR100G	100	TPR	32	130	128	95 X 67	73 X 45
C-5 ESD								
	C-5TPRESD100G	100	TPR	32	130	128	95 X 67	73 X 45
C-7								
	C-7TPR100G	100	TPR	32	130	128	95 X 67	73 X 45
C-7 ESD								
	C-7TPRESD100G	100	TPR	32	130	128	95 X 67	73 X 45

CASTERS

Picture	Part No.	(mm)	Wheel Material	(mm)	(kg)	(mm)	(mm)	(mm)
C-8								
	C-8TPR150G	150	TPR	50	410	190	115 X 100	84 X 71.3
C-8 ESD								
	C-8TPRESD150G	150	TPR	50	410	190	115 X 100	84 X 71.3
C-8 PU								
	C-8STPU200R	200	PU	50	480	240.5	115 X 100	84 X 71.3

Picture	Part No.	(mm)	Wheel Material	(mm)	(kg)	(mm)	(mm)	(mm)
C-10A								
	C-10ATPR150G	150	TPR	50	410	190	115 X 100	84 X 71.3
C-10A ESD								
	C-10ATPRESD150G	150	TPR	50	410	190	115 X 100	84 X 71.3
C-10A PU								
	C-10ASTPU200R	200	PU	50	480	240.5	115 X 100	84 X 71.3

C-14

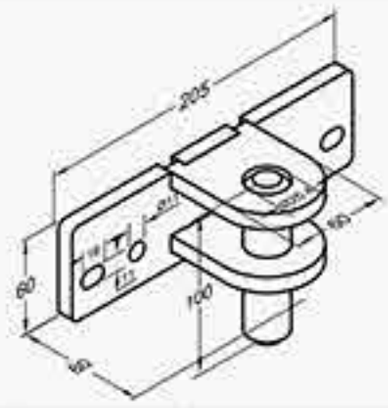

kg/Pc	1.780
Pc/Ctn	9

C-15

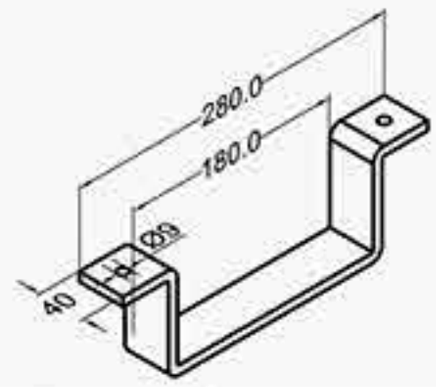

kg/Pc	1.010
Pc/Ctn	20

S Series

SQUARE PIPE

40 Square Pipe

S-1

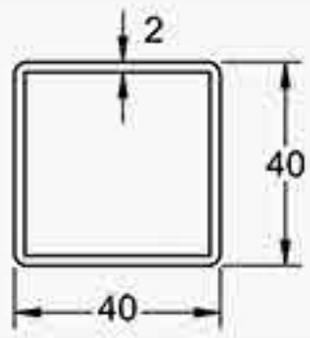

kg/m	2.389
m/Pc	2.44
m/Bdl	9.76

SJ-1

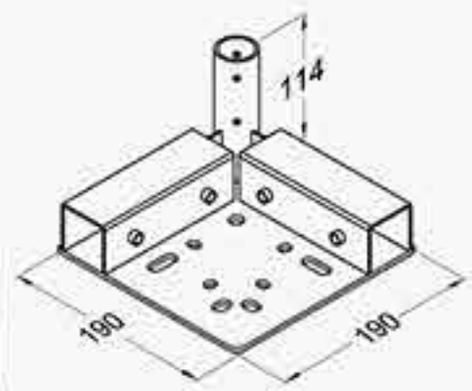

kg/Set	1.92
Sets/Ctn	2

SJ-2

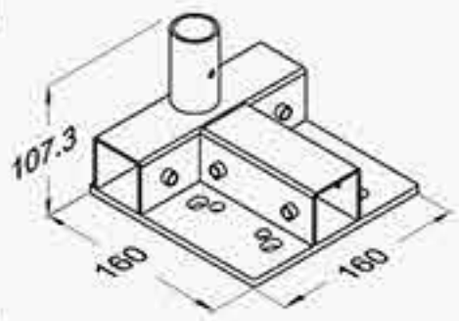

kg/Set	1.50
Sets/Ctn	2

SJ-3

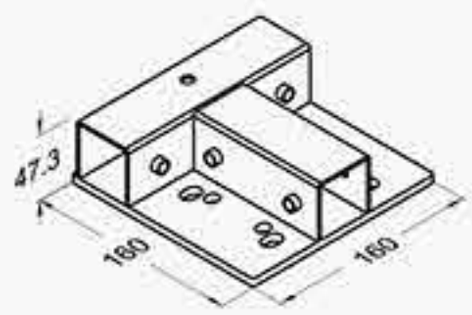

kg/set	1.35
Sets/Ctn	2

SJ-4

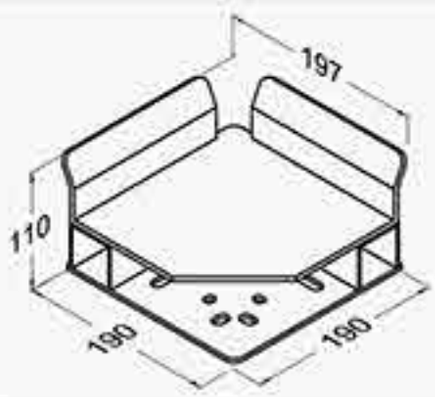

kg/Set	3.64
Sets/Ctn	2

K Series

SQUARE SERIES

27 Square Pipe

K-27

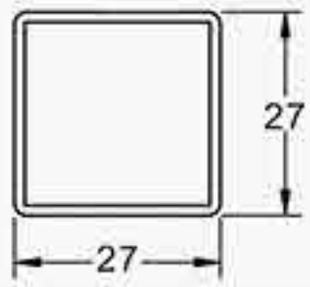

kg/m	2.389
m/Pc	2.44
m/Bdl	9.76

K-1

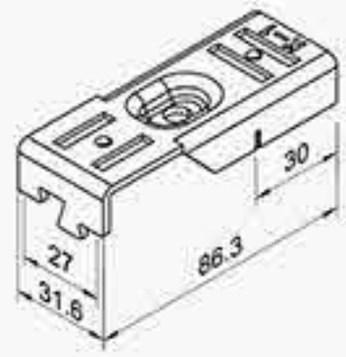

kg/Pc	0.00
Pc/Ctn	00

K-1A

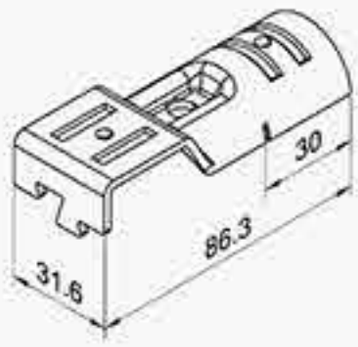

kg/Pc	0.00
Pc/Ctn	00

K-2

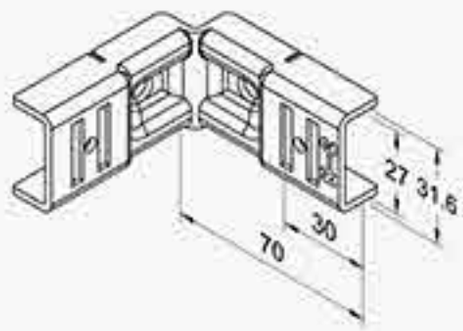

kg/Pc	0.00
Pc/Ctn	00

K-3

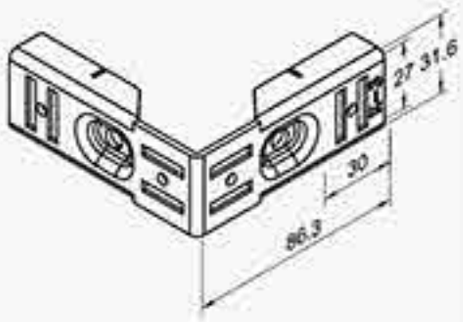

kg/Pc	0.00
Pc/Ctn	00

K-4

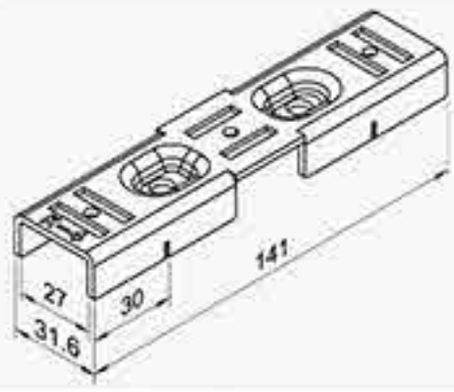

kg/Pc	0.00
Pc/Ctn	00

K-F6

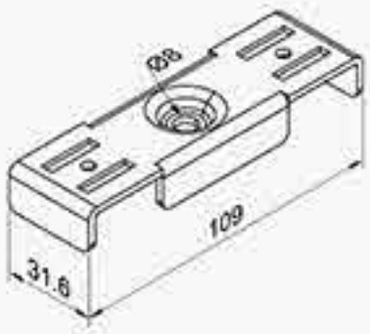

kg/Pc	0.00
Pc/Ctn	00

Unit : mm

KJ-1

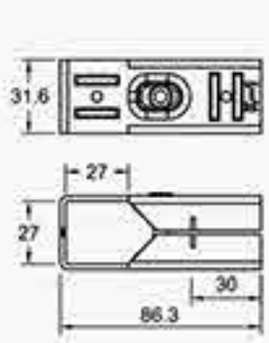

K-1 : 2 Pcs	kg/Set : 0.000
N-1/N-2 : 1 Set	Sets/Ctn : 4 / 00

KJ-1A

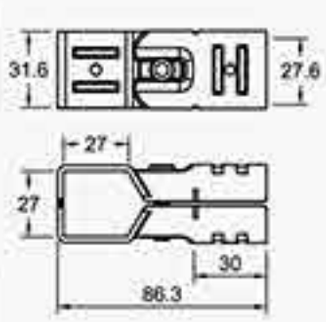

K-1A : 2 Pcs	kg/Set : 0.000
N-1/N-2 : 1 Set	Sets/Ctn : 4 / 00

KJ-2

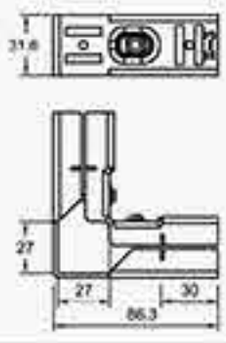

K-2 : 1 Pc	kg/Set : 0.000
K-3 : 1 Pc	Sets/Ctn : 4 / 00
N-1/N-2 : 2 Sets	

KJ-4

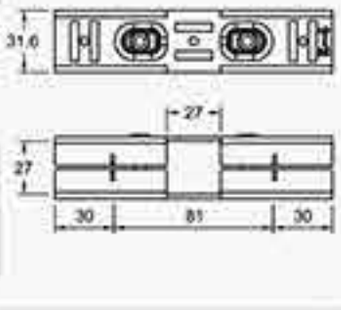

K-4 : 2 Pcs	kg/Set : 0.000
N-1/N-2 : 2 Sets	Sets/Ctn : 4 / 00

A Series

ALUMINIUM

A Series

Welcome OEM Order

Combining Pipe Racking & Green Frame System

GAJ28-H01

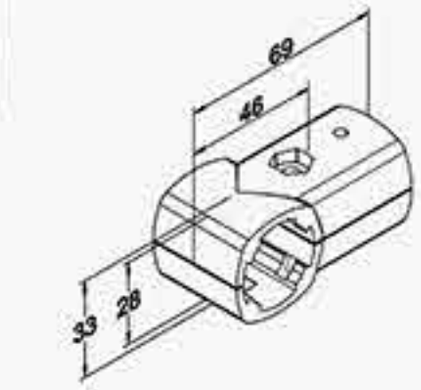

kg/Set	0.086
Sets/Ctn	96

GAJ28-H01A

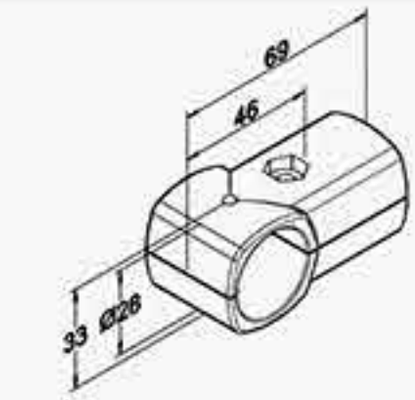

kg/Set	0.086
Sets/Ctn	96

GAJ28-H02

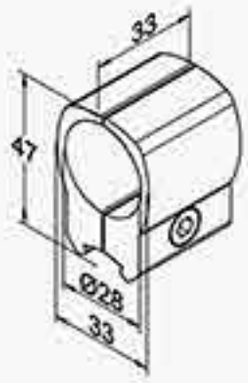

kg/Set	0.063
Sets/Ctn	144

GAJ28-H03

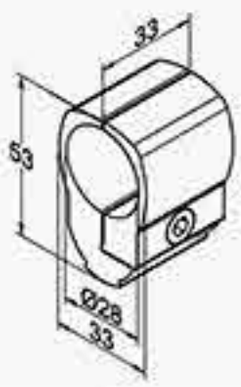

kg/Set	0.073
Sets/Ctn	136

GAJ28-H04

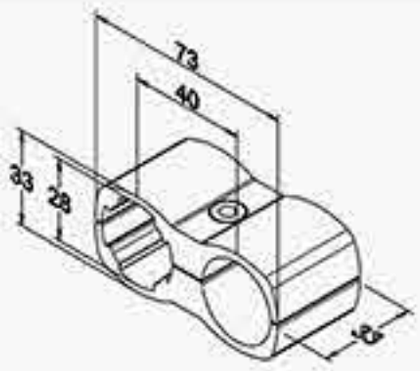

kg/Set	0.088
Sets/Ctn	96

GAJ28-H05

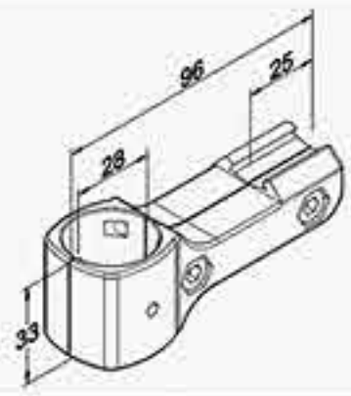

kg/Set	0.101
Sets/Ctn	96

GA28-14A

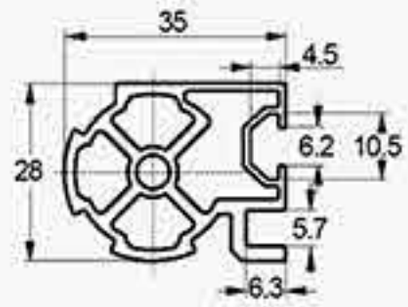

kg/m	0.840
m/Pc	4
m/Bdl	48

GA28-15A

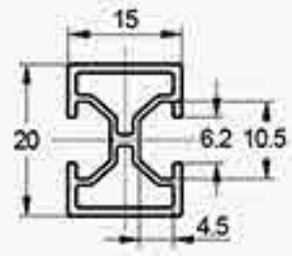

kg/m	0.244
m/PC	4
m/BDL	48

GA28-16A

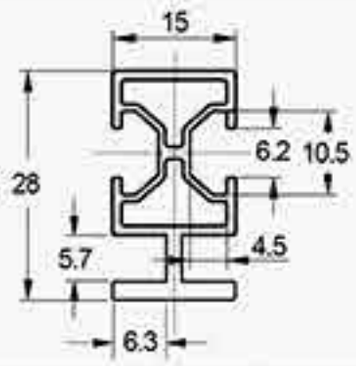

kg/m	0.368
m/Pc	4
m/Bdl	48

GA28-17A-100

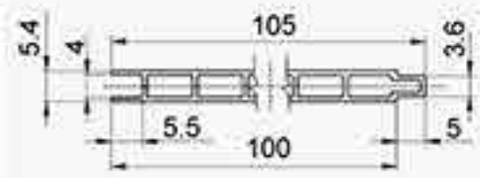

kg/m	0.549
m/Pc	4
m/Bdl	48

GA28-18A-50

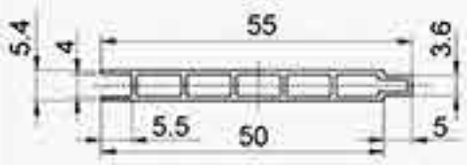

kg/m	0.283
m/Pc	4
m/Bdl	48

GA28-19A-30

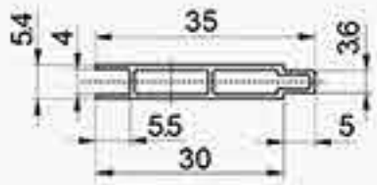

kg/m	0.170
m/Pc	4
m/Bdl	48

GAJ28-B05

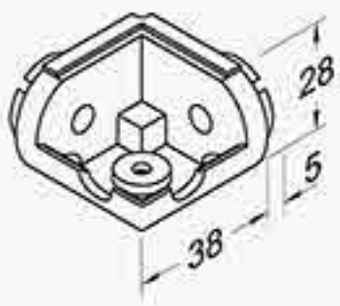

kg/Pc	0.042
Pc/Ctn	000

GAE28-46

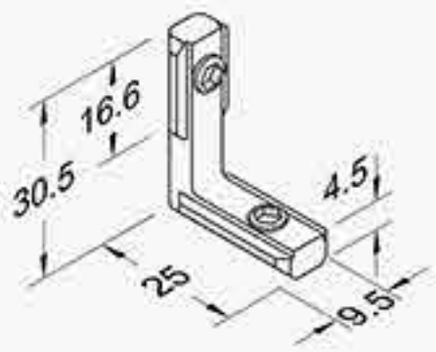

kg/Pc	0.000
Pc/Ctn	000

GAP28-19

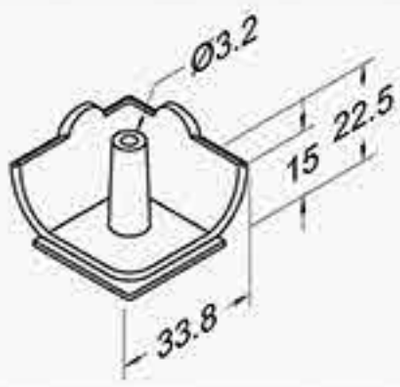

kg/Pc	0.104
Pc/Ctn	130

GAP28-20

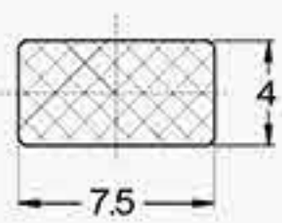

kg/Pc	0.100
Pc/Ctn	120

Pallet system assembly

1 Main Frame

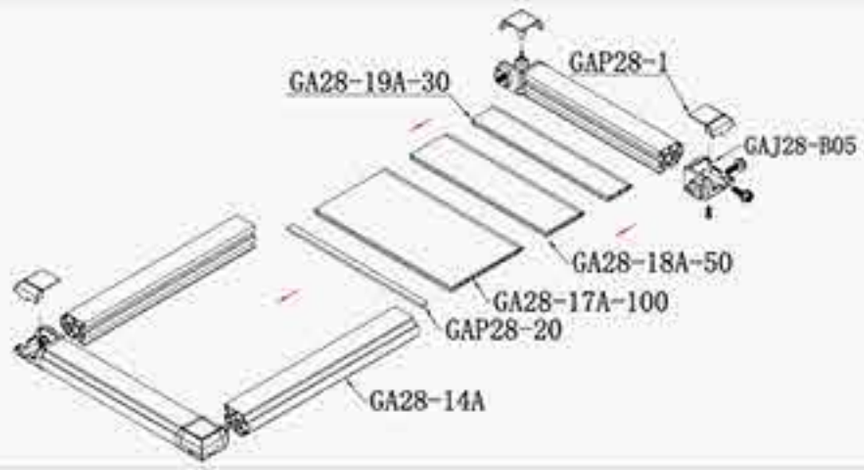

2 Pallet Separate Type Assembly

3 Dimension Select Method

A=L-76 A=L2 -5
X=W1 +12 X=B+12
Y=L2+ 12 Y=A+12

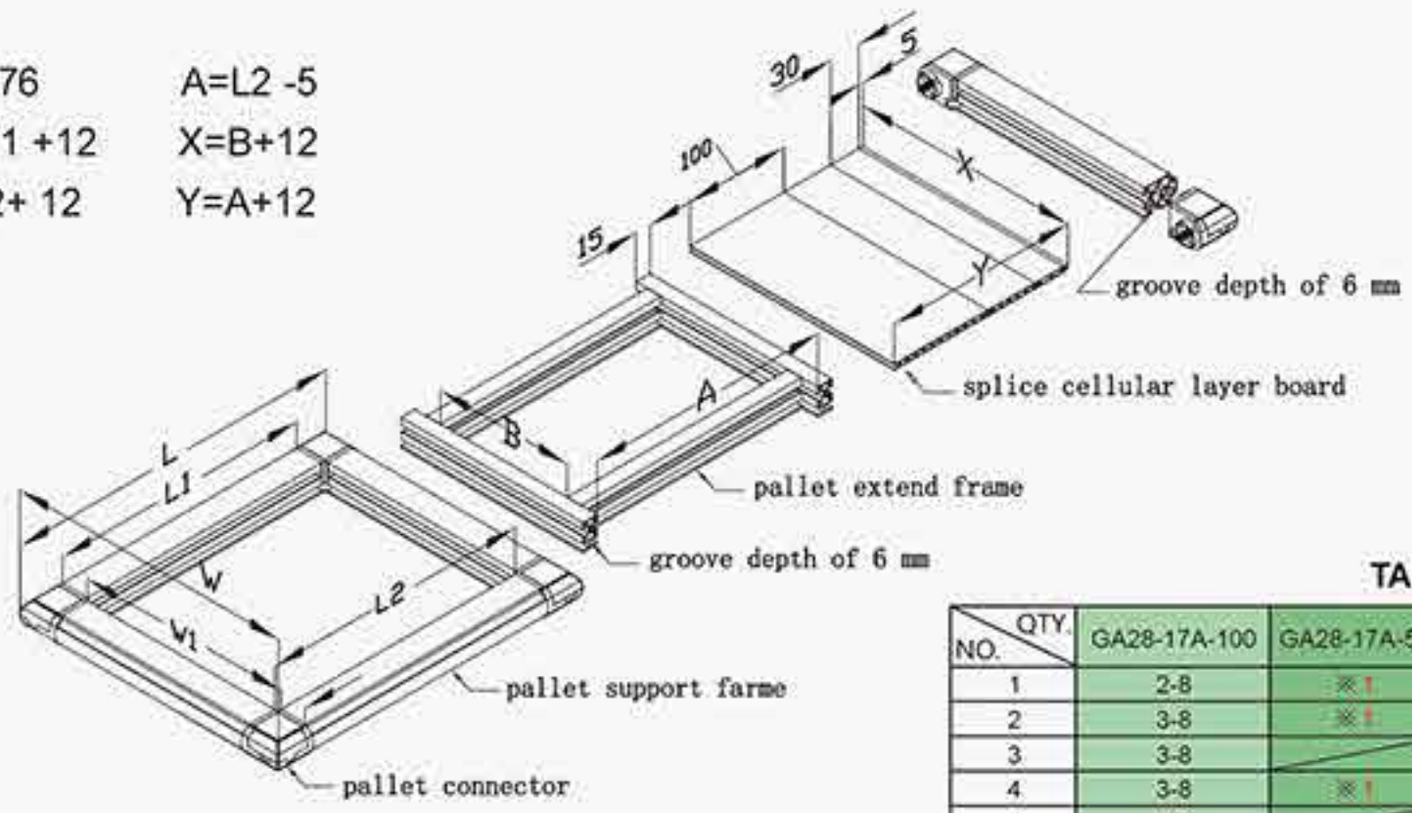

※ Layer borad width three kinds of cellular layer board +5mm

※ When Pallet connector connected with pallet support frame, Please use the outer hexagon socket with electricity tool to lock the tapping screw and set the torque to 8~10N/m

TABLE

NO. \ QTY.	GA28-17A-100	GA28-17A-50	GA28-17A-30	L2 / W1 (mm)	L / W (mm)
1	2-8	※1	※3	333 - 1133	403 - 1203
2	3-8	※1		343 - 1143	413 - 1213
3	3-8		※2	353 - 1153	423 - 1223
4	3-8	※1	※1	373 - 1173	443 - 1243
5	3-8		※3	383 - 1183	453 - 1253
6	4-8			393 - 1193	463 - 1263
7	3-8	※1	※2	403 - 1203	473 - 1273
8	3-8		※4	413 - 1213	483 - 1283
9	4-8		※2	423 - 1223	493 - 1293

※ FIXED QTY.

4 Frame assembly method

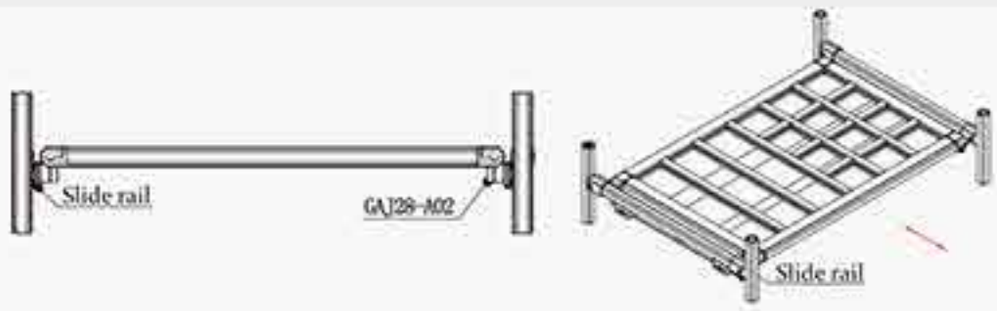

5 Hoisting assembly method

6 Application

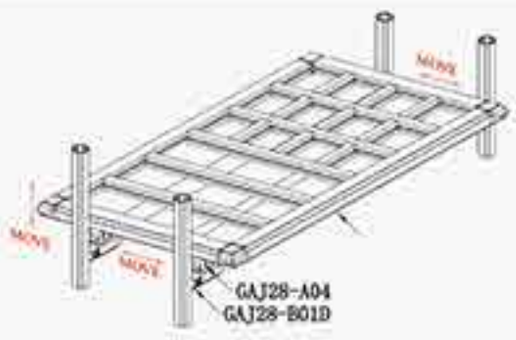

Pallet horizon assembly

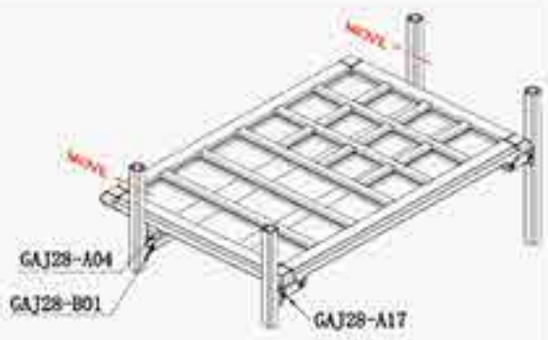

Pallet vertical assembly

Shelf

Trolley

O Series
TOOLS

O-1

O	5 mm
L	160 mm
A	33 mm
kg/Pc	0.025
Pc/Ctn	396

O-2

O	5 mm
L1	123 mm
L2	16 mm
kg/Pc	0.103
Pc/Ctn	20

O-3/O-3A

Cutting Range	3-32 mm
Set	1 X O-3
Optional Parts	2 X O-3A
kg/Pc	0.417 / 0.019
Pc/Ctn	12

O-4

Cutting Range	Φ 6 - Φ 40 mm
kg/Pc	0.230
Pc/Ctn	32

Tube inside and outside trimming knife.

O-5/O-5A

Packaging (included)	1xO-5 ordinary trimming blade 1xO-5A high strength trimming blade
kg/Pc	0.060 / 0.021

O-6

O	13 / 16 mm
Thicknes	3.2 mm
kg/Pc	0.050
Pc/Ctn	200

For caster assembling.

O-7

L1	1800 mm
L2 Range	0-1800 mm

O-8

Sawing Range (mm)	○	Φ 95
	□	85 X 85
		110 X 75
	●	Φ 55
	■	50 X 50
Max Clamp		110 mm
Main Motor		4/2 1.8 / 2.4 KW
Saw Blade Type		250 / 275 / 300

AIPIN
爱拼
淘